00080328

NOT TO BE ISSUED
OUT OF THE LIBRARY.

Digitized with financial assistance from the
Government of Maharashtra
on 16 March, 2016

F. Say. W. H. Mote

His Royal Highness

Prince Albert, K.G.

President of the Royal Commission of the

Great Exhibition 1851

D. BOGUE, 86, FLEET STREET, SEPT. 1, 1851.

LECTURES

ON THE RESULTS

OF THE

GREAT EXHIBITION OF 1851,

DELIVERED BEFORE THE

Society of Arts, Manufactures, and Commerce,

80328
al

AT THE SUGGESTION OF H.R.H. PRINCE ALBERT,

PRESIDENT OF THE SOCIETY.

LONDON:
DAVID BOGUE, 86 FLEET STREET.
MDCCCLII.

803?5

LONDON:
Printed by G. BARCLAY, Castle St. Leicester Sq

TO

THE QUEEN'S MOST EXCELLENT MAJESTY.

MADAM,

With your Majesty's gracious leave, we, the undersigned members of the Council of the Society of Arts, dedicate to your MAJESTY this Series of Lectures upon the Exhibition of the Works of Industry of all Nations, delivered at the suggestion of His Royal Highness the PRINCE ALBERT, the President of our Society.

In doing this, we desire to express our grateful sense of the sanction and support which your MAJESTY gave to the Exhibition from its earliest announcement, without which it must have wanted a national character, and failed to secure the co-operation of the nations of the

world. Your Majesty's name headed the subscription-list, and animated all classes to assist in making the Exhibition self-supporting; your Majesty's contributions as an exhibitor afforded even still more practical aid; your Majesty's presence at the opening, in the largest concourse ever assembled under one roof in this kingdom, inaugurated the triumphant success of the Exhibition; and, above all, your Majesty's frequent daily visits taught your people how the lessons it offered ought to be studied.

History does not inform us that any other Sovereign of this country has ever shown so personal and affectionate a regard for the progress of the Arts, Sciences, and Industry of the people as your MAJESTY did on this occasion,—a fact which makes us hope that a continued and most auspicious developement of them will be the consequence.

We rejoice that when future ages shall look back to this first Exhibition of the Works of Industry of all Nations, and trace its beneficial

results upon the people, not of this country only but of the whole world, they will find that the event took place in your Majesty's happy reign, and was so largely aided by your Majesty's actual personal assistance.

We appreciate the privilege of subscribing this address as—

Your Majesty's

Most devoted Subjects and Servants,

BUCCLEUCH.
CARLISLE.
ELLESMERE.
GRANVILLE.
COLBORNE.
OVERSTONE.
JOHN P. BOILEAU.
E. STRUTT.
T. MILNER GIBSON.
HENRY THOMAS HOPE.
GEORGE MOFFATT.
SAMUEL MORTON PETO.
ROBERT STEPHENSON.
BERIAH BOTFIELD.
C. BARRY.
I. K. BRUNEL.
THOMAS CRESWICK.
WM. FOTHERGILL COOKE.
CHARLES DICKENS.
C. WENTWORTH DILKE.
M. FARADAY.
OWEN JONES.
J. M. RENDEL.
W. TOOKE.
JOHN BELL.
THOMAS CUBITT.
JOSEPH GLYNN.
WYNDHAM HARDING.
T. H. HENRY.
H. C. OWEN.
LYON PLAYFAIR.
J. SCOTT RUSSELL.
W. W. SAUNDERS.
SYDNEY SMIRKE.
EDWARD SOLLY.
THOMAS TWINING, JUN.
PETER LE NEVE FOSTER.
HENRY COLE.
SAMUEL REDGRAVE.
THOMAS WINKWORTH.

CONTENTS.

I.

Rev. W. Whewell, D.D. F.R.S. Master of Trinity College, Cambridge.

Page

The General Bearing of the Great Exhibition on the Progress of Art and Science 1

II.

Sir Henry T. De la Beche, C.B. F.R.S.

Mining, Quarrying, and Metallurgical Processes and Products . 35

III.

Richard Owen, F.R.S.

The Raw Materials from the Animal Kingdom 75

IV.

Jacob Bell, Esq. M.P.

Chemical and Pharmaceutical Processes and Products 133

V.

Lyon Playfair, C.B. F.R.S.

The Chemical Principles involved in the Manufactures of the Exhibition as indicating the Necessity of Industrial Instruction 147

VI.

John Lindley, Ph.D. F.R.S. Professor of Botany in University College, London.

Substances used as Food, illustrated by the Great Exhibition . . 209

VII.

PROFESSOR EDWARD SOLLY, F.R.S.

Page

The Vegetable Substances used in the Arts and Manufactures, in relation to Commerce generally 243

VIII.

THE REV. ROBERT WILLIS, M.A. F.R.S. Jacksonian Professor in the University of Cambridge.

Machines and Tools for Working in Metal, Wood, and other Materials 291

IX.

JAMES GLAISHER, Esq. F.R.S.

Philosophical Instruments and Processes, as represented in the Great Exhibition 321

X.

HENRY HENSMAN, Esq.

Civil Engineering and Machinery generally 403

XI.

PROFESSOR J. F. ROYLE, M.D. F.R.S.

The Arts and Manufactures of India 441

XII.

CAPTAIN WASHINGTON, R.N. F.R.S.

On the Progress of Naval Architecture, as indicating the Necessity for Scientific Education, and for the Classification of Ships and of Steam-Engines; also, on Life-Boats 53

INDEX 65

THE GENERAL BEARING OF THE GREAT EXHIBITION ON THE PROGRESS OF ART AND SCIENCE.

BY

WILLIAM WHEWELL, D.D. F.R.S.

MASTER OF TRINITY COLLEGE, CAMBRIDGE.

DR. WHEWELL

ON THE

GENERAL BEARING OF THE GREAT EXHIBITION.

It seems to me as if I were one of the persons who have the least right of any to address an audience like this on the subject of the Great Exhibition of the Art and Industry of All Nations, of which the doors have so lately closed; inasmuch as I have had no connexion with that great event, nor relation to it, except that of a mere spectator—one of the many millions there. The eminent and zealous men in whose wide views it originated, by whose indomitable energy and perseverance the great thought of such a spectacle was embodied in a visible, material shape; those who, from our own countries or from foreign lands, supplied it with the treasures and wonders of art; those who, with scrutinizing eye and judicial mind, compared those treasures and those wonders, and stamped their approval on the worthiest; those who can point to the glories of the Exhibition, and say, "*quorum pars magna fui*;"—those persons may well be considered as having a right to express to you the thoughts which have been suggested by the scenes in which they have thus had to live: but of

these I am not one. I have been in the Exhibition, as I have said, a mere spectator. Nevertheless, the Council of the Society of Arts have done me the honour to express a wish that I should offer to you such reflections as the spectacle of the Great Exhibition has suggested to me; and, in deference to their wishes, and especially as a token of my admiration of the truly royal mind, which saw clearly, in despite of the maxims of antiquity, that there *was* such a Royal Road to knowledge, I shall venture to offer you a few remarks,—which, precisely on account of the circumstances which I have stated, may be considered as representing the views of an unconnected spectator of the great spectacle.

To write or speak the Epilogue after any great and grand Drama is by no means an easy task. We see the confession of the difficulty in the very incongruity of the manner in which the task is sometimes attempted; as, when after the curtain has fallen upon a deep and solemn tragedy, some startling attempt at wit and pleasantry is uttered to the audience; it may be by one of the characters, whose deep sorrows or lofty aims we have been following with the profoundest interest. You will, at least, on the present occasion, not have the difficulty of the task shown *in this manner*. Nor, indeed, is it my office, in any sense, to speak an epilogue at all. Perhaps such remarks as I have to make may rather be likened to the criticism which comes after the drama. For, as you know, Criticism does come after Poetry: the age of Criticism after the age of Poetry; Aristotle after Sophocles, Longinus after Homer. And the reason of this has been well pointed out in our

time :—that words, that human language, appear in the form in which the poet utters them, and works with them for his purposes, before they appear in the form in which the critic must use them : language is picturesque and affecting, first ; it is philosophical and critical afterwards : —it is first concrete, then abstract :—it acts first, it analyses afterwards. And this is the case, not with words only, but with works also. The *Poet*, as the Greeks called him, was the *Maker*, as our English fathers, also, were wont to call him. And man's power of making may show itself not only in the beautiful *texture* of language, the grand *machinery* of the epic, the sublime display of poetical *imagery ;* but in those material works which supply the originals from which are taken the derivative terms which I have just been compelled to use : in the Textures of soft wool, or fine linen, or glossy silk, where the fancy disports itself in wreaths of visible flowers ; in the Machinery mighty as the thunderbolt to rend the oak, or light as the breath of air which carries the flower-dust to its appointed place ; in the Images which express to the eye beauty and dignity, as the poet's verse does to the mind ; so that it is difficult to say whether Homer or Phidias be more truly a poet. That mighty building, then, along the aisles of which we have wandered day after day in past months, full as it was of the works of man, contained also the works of many who were truly Makers ;—who stamped upon matter, and the combinations of matter, that significance and efficacy which makes it a true exponent of the inward activity of man. The objects there, the sym-

bols, instruments, and manifestations of beauty and power, were utterances,—articulate utterances of the human mind, no less than if they had been audible words and melodious sentences. There were expressed in the ranks of that great display many beautiful and many powerful thoughts of gifted men of our own and of other lands. The Crystal Palace was the cabinet in which were contained a vast multitude of compositions—not of words, but of things, which we who wandered along its corridors and galleries might con, day by day, so as to possess ourselves, in some measure and according to our ability, of their meaning, power, and spirit. And now, that season of the perusal of such a collection of works being past; those days of wonderment at the creations of such a poetry being gone by; the office of reading and enjoying being over; the time for criticism seems to have arrived. We must now consider what it is that we have admired, and why; must try to analyse the works which we have thus gazed upon, and to discover the principles of their excellence. As the Critic of literary art endeavours to discern the laws of man's nature by which he can produce that which is beautiful and powerful, operating through the medium of language, so the Critic of such art as we have had here presented to us—of *material* art, as we may term it—endeavours to discern the laws of material nature; to learn how man can act by these, operating through the medium of matter, and thus produce beauty, and utility, and power. This kind of criticism appears to be the natural and proper sequel to such a great burst of pro-

duction and exhibition as we have had to witness—to discover what the laws of operative power are, after having had so great a manifestation of what they do.

To discover the laws of operative power in literary works, though it claims no small respect under the name of Criticism, is not commonly considered the work of a science. But to discover the laws of operative power in material productions, whether formed by man or brought into being by Nature herself, is the work of a science, and is indeed what we more especially term Science; and thus, in the case with which we have to do, we have, instead of the Criticism which naturally comes after the general circulation of Poetry, the Science which naturally comes after a great exhibition of Art: two cases of succession connected by a very close and profound analogy. That this view of the natural and general succession of science to art, as of criticism to poetry, is not merely fanciful and analogical, we may easily convince ourselves by looking for an instant at the progress of art and of science in past times. For we see that, in general, art has preceded science. Men have executed great, and curious, and beautiful works before they had a scientific insight into the principles on which the success of their labours was founded. There were good artificers in brass and iron before the principles of the chemistry of metals were known; there was wine among men before there was a philosophy of vinous fermentation; there were mighty masses raised into the air, cyclopean walls and cromlechs, obelisks and pyramids—probably gigantic Doric pillars and entablatures—before there was a theory of the

mechanical powers. The earlier generations did; the later explained that it had been possible to do. Art was the mother of Science: the vigorous and comely mother of a daughter of far loftier and serener beauty. And as it had been in the period of scientific activity in the ancient world, so was it again in the modern period in which Science began her later growth. The middle ages produced or improved a vast body of arts. Parchment and paper, printing and engraving, glass and steel, compass and gunpowder, clocks and watches, microscopes and telescopes, not to speak of the marvels of architecture, sculpture, and painting, all had their origin and progress, while the sciences of recent times were in their cradle or were unborn. The dawn of the sixteenth century presented, as it were, a Great Exhibition of the works which men had been producing from the time of the downfall of Roman civilization and skill. There, too, might be seen, by him who travelled from land to land, beautiful textures, beautiful vessels of gold and bronze, of porcelain and glass, wonderful machines, mighty fabrics; and from that time, stimulated by the sight of such a mass of the works of human skill,—stimulated still more by the natural working of those powers of man from which such skill had arisen, —men were led to seek for science as well as art; for science as the natural complement of art, and fulfilment of the thoughts and hopes which art excites;—for science as the fully developed blossom, of which art is the wonderfully involved bud. Stimulated by such influences, the scientific tendencies of modern Europe took their starting impulse from the Great Exhibition of the productions of

the middle ages which had accumulated in the sixteenth century; and have ever since been working onwards, with ever-increasing vigour, and in an ever-expanding sphere.

As the successful scientific speculations of the last three centuries have been the natural sequel to the art-energies of the preceding ages, so must the newest scientific speculations of our contemporaries and their successors, in order to be successful, be the result and consequence of the powers, as yet often appearing in the undeveloped form of art alone, which exist among us at the present day. And thus a great spectacle of the works of material art ought to carry with it its scientific moral. And the opportunities which we have lately had of surveying the whole of the world in which art reigns, and of appreciating the results of its sway, may well be deemed too valuable to be let slip for the purposes of that scientific speculation which is the proper sequence of such occasions. So it has seemed to those who have from the beginning taken a lofty, and comprehensive, and hopeful view of the great undertaking of which the first act is now completed; and especially to that mind which has always taken *the most* lofty, and comprehensive, and hopeful view.

And in order to carry into effect this suggestion, it has been determined that persons well qualified to draw from the spectacle the series of scientific morals which it offers, should present them to you here;—that critics should analyse for you some of the fine compositions with which you have become acquainted;—that men of science should explain to you what you ought to learn from such an exhibition of art. And it has been thought that it might

not be useless that you should be reminded, in the first place, how great and unique the occasion is, and how peculiar are some of the lessons which even the most general spectator, unfit to enter into the details of any of the special arts, may draw from it.

For indeed it is obvious, at a glance, how great and unexampled is the opportunity thus given to us, of taking a survey of the existing state of art in every part of the world. I have said, that if, in the sixteenth century, an intelligent spectator could have travelled from land to land, he might, in that way, have seen a wonderful collection of the works of man in many different countries; and combining all these in his thoughts, he would have had in his mind a representation of the whole progress of human art and industry up to the last moment, and a picture of the place which each nation at that moment occupied in the line of that progress. But what time, what labour, what perseverance, what hardships, what access to great and powerful men in every land, what happiness of opportunity, would be implied in the completion of such a survey! A life would scarcely suffice for it; a man could scarcely be found who would achieve it, with all appliances and means which wealth and power could give. He must, like the philosophers of ancient days, spend all his years of vigour in travelling; must roam in the varied regions of India; watch the artisan in the streets of the towns of China; dive into the mines of Norway and of Mexico; live a life in the workshops of England, France, and Germany; and trace the western tide of industry and art as it spreads over the

valley of the Mississippi. And when he had done all this, and however carefully he had done it, yet how defective must it be at least in one point! How far must it be from a *simultaneous* view of the condition of the whole globe as to material arts! During the time that he has been moving from place to place, the face of the world has been rapidly changing. When he saw Tunis it was a barbarous state; now that he has to make up his account, it is the first which asks for a leading place among the civilized communities of the industrial world. When he visited the plains of Iowa and Wisconsin, they were wild prairie; they are now the fields from which the cereal harvest is swept by the latest improved reaping machine. When he was at the antipodes, the naked savage offered the only specimen of art in his rude club and frail canoe; now there is there a port whose lofty ships carry regularly to European markets multiplied forms of native produce and manufactures. Even if his picture be complete as to surface, what anachronisms must there be in it! How much that expresses not the general view of the earth, but the accidental peculiarities of the traveller's personal narrative! And then, how dim must be the images of the thing seen many years ago compared with that which is present to the eye! How impossible to compare the one with the other—the object now seen in age with a similar object remembered in youth! And after all, when we have assumed such a traveller—such a one as never has been—the Ulysses of modern times—seeing the cities of many men, and knowing their minds—seeing the workshops of all nations, and knowing their arts—we have but one such. His knowledge is only his. He

cannot, in any clear or effective manner, communicate any large portion of it to others. It exists only for him—it perishes with him. And now let us, in the license of epical imagination, suppose such an Ulysses—much-seeing, much-wandering, much-enduring—to come to some island of Calypso, some well-inhabited city, under the rule of powerful and benignant, but plainly, he must believe, superhuman influences, and there to find that image of the world and its arts, which he had vainly tried to build up in his mind, exhibited before his bodily eye in a vast crystal frame;—true in every minutest thread and hue, from the sparkle of the diamond to the mighty bulk of the colossus; true to that which belongs to every part of the earth; and this, with the effects which the arts produce, not at the intervals of the traveller's weary journey, but everywhere at the present hour. And, further, let him see the whole population of the land—thousands upon thousands, millions upon millions, streaming to this sight, gazing their fill, day after day, at this wonderful vision, inviting the men of neighbouring and of distant lands to gaze with them; looking at the objects, not like a fairy picture in the distant clouds, but close at hand; comparing, judging, scrutinizing the treasures produced by the all-bounteous earth, and the indomitable efforts of man, from pole to pole, and from east to west; or, as he would learn more truly to measure, from east to east again. When we have supposed such a vision, do we not seem to have gone beyond

> "Quicquid Grecia mendax
> Audit in historiâ;"

all the wonders of that wondrous ancient Odyssean tale?

And yet, in making such a supposition, have we not been exactly describing that which we have seen within these few months? Have not we ourselves made part of the population of such a charmed isle,—of the crowds which have gazed on such a magic spectacle?

But now that we have had the spectacle before us, let us consider for a moment what the vision was, and what were the reflections which it excited. We had, offered to our review, the choicest productions of human art in all nations; or, at least, collections which might be considered as representing all nations. Now in nations compared with nations there is a difference; in a nation compared with itself at an earlier time, there is a progress. There may not always be a progress in good government; there may not necessarily be, though we would gladly hope that there is, a progress in virtue, in morality, in happiness. But there always is, except when very adverse influences roll back the common course of things, a progress in art, and generally in science. In the useful and ornamental arts nations are always going forwards, from stage to stage. Different nations have reached different stages of this progress, and all their different stages are seen at once, in the aspect which they have at this moment in the magical glass, which the enchanters of our time have made to rise out of the ground like an exhalation. The infancy of nations, their youth, their middle age, and their maturity, all appear, in their simultaneous aspect, like the most distant objects revealed at the same moment by a flash of lightning in a dusky night:—or we may compare the result to that which would be produced, if we could

suppose some one of the skilful photographers whose subtle apparatus we have had exhibited there, could bring within his field of view the surface of the globe, with all its workshops and markets, and produce instantaneously a permanent picture, in which the whole were seen side by side. But it is not a mere picture of things which are found standing together that we have had presented to us; the great achievement was the bringing them together. You have most of you probably heard of the careful and economical critic, who proposed to reduce the extravagance of the wish of the impatient separated lovers, that the gods would annihilate space *and* time; and who remarked that it would answer the end desired if one of the two were annihilated. By annihilating the space which separates different nations, we produce a spectacle in which is also annihilated the time which separates one stage of a nation's progress from another.

An ingenious speculator of our own day, clothing these metaphysical abstractions in the form which modern science assigns to them, has shown how we might, theoretically speaking, be, in a few instants, actual spectators, bodily and contemporaneous eye-witnesses, of all the events which have passed since man has existed upon earth. For, if we only imagine that, as the visual impressions on the vehicle of light, by which alone vision can take place, travel away from the scenes by the occurrence of which their configuration was given to them, we also travel after this moving vision, and go but a very little faster than light itself, we shall overtake successively the visual images of all successive events, and see them as

truly as a distant spectator (and what spectator is not more or less distant?) sees what passes before his eyes. We might thus see now what is passing around us, and the next minute, by rushing to the borders of the solar system, where the images are still travelling outwards, see the first inhabitant of this island placing his foot upon its coast; and in the intermediate distances we should successively overtake and see, with our bodily eyes, in inverted order, the events of the English, Norman, Saxon, Roman, and British times; and we might mark, at each period, the food, the clothing, the arms, the tools, the houses, the machines, and the ornaments of the various times.

Now, that which this scientific dream thus presents to us in imagination, the Exhibition of the Industry and Arts of All Nations has presented as a visible reality; for we have had there collected examples of the food and clothing and other works of art of nations in every stage of the progress of art. From Otaheite, so long in the eyes of Englishmen the type of gentle but uncultured life, Queen Pomare sends mats and cloth, head-dresses and female gear, which the native art of her women fabricates from their indigenous plants. From Labuan, the last specimen of savage life with which this country has become connected, we have also clothes and armour, weapons and musical instruments. From all the wide domains which lie within or around our Indian Empire we have rich and various contributions; from Sincapore and Ceylon, Celebes and Java, Mengatal and Palembang. The ruder and more primitive of these regions send us their native food and clothing, their fishing nets and

baskets; but art soon goes beyond these first essays. From Sumatra we have the loom and the plough, lacquered work and silken wares; and as we proceed from these outside regions to that central and ancient India, so long the field of a peculiar form of civilization, we have endless and innumerable treasures of skill and ingenuity, of magnificence and beauty. And yet we perceive that, in advancing from these to the productions of our own form of civilization, which has, even in that country, shown its greater power, we advance also to a more skilful, powerful, comprehensive, and progressive form of art. And looking at the whole of this spectacle of the arts of life in all their successive stages, there is one train of reflection which cannot fail, I think, to strike us; namely, this:—In the first place, that man is, by nature and universally, an artificer, an artisan, an artist. We call the nations, from which such specimens came as those which I first mentioned, rude and savage, and yet how much is there of ingenuity, of invention, of practical knowledge of the properties of branch and leaf, of vegetable texture and fibre, in the works of the rudest tribes! How much, again, of manual dexterity, acquired by long and persevering practice, and even so, not easy! And then, again, not only how well adapted are these works of art to the mere needs of life, but how much of neatness, of prettiness, even of beauty, do they often possess, even when the work of savage hands! So that man is naturally, as I have said, not only an artificer, but an artist. Even we, while we look down from our lofty summit of civilized and mechanically-aided skill upon the

infancy of art, may often learn from them lessons of taste. So wonderfully and effectually has Providence planted in man the impulse which urges him on to his destination,—his destination, which is, to mould the bounty of nature into such forms as utility demands, and to show at every step that with mere utility he cannot be content. And when we come to the higher stages of cultured art—to the works of nations long civilized, though inferior to ourselves, it may be, in progressive civilization and mechanical power, how much do we find in their works which we must admire, which we might envy, which, indeed, might drive us to despair! Even still, the tissues and ornamental works of Persia and of India have beauties which we, with all our appliances and means, cannot surpass. The gorgeous East showers its barbaric pearl and gold into its magnificent textures. But is there really anything *barbaric* in the skill and taste which they display? Does the Oriental prince or monarch, even if he confine his magnificence to native manufactures, present himself to the eyes of his slaves in a less splendid or less elegant attire than the nobles and the sovereigns of this our Western world, more highly civilized as we nevertheless deem it? Few persons, I think, would answer in the affirmative. The silks and shawls, the embroidery and jewellery, the moulding and carving, which those countries can produce, and which decorate their palaces and their dwellers in palaces, are even now such as we cannot excel. *Oriental* magnificence is still a proverbial mode of describing a degree of splendour and artistical richness which is not found among ourselves.

What, then, shall we say of ourselves? Wherein is our superiority? In what do we see the effect, the realization, of that more advanced stage of art which we conceive ourselves to have attained? What advantage do we derive from the immense accumulated resources of skill and capital—of mechanical ingenuity and mechanical power—which we possess? Surely our imagined superiority is not all imaginary; surely we really are more advanced than they, and this term "advanced" has a meaning; surely that mighty thought of a PROGRESS in the life of nations is not an empty dream; and surely our progress has carried us beyond them. Where, then, is the import of the idea in this case? What is the leading and characteristic difference between them and us, as to this matter? What is the broad and predominant distinction between the arts of nations rich, but in a condition of nearly stationary civilization, like Oriental nations, and nations which have felt the full influence of progress like ourselves?

If I am not mistaken, the difference may be briefly expressed thus:—That in those countries the arts are mainly exercised to gratify the tastes of the few; with us, to supply the wants of the many. There, the wealth of a province is absorbed in the dress of a mighty warrior; here, the gigantic weapons of the peaceful potentate are used to provide clothing for the world. For that which makes it suitable that machinery, constructed on a vast scale, and embodying enormous capital, should be used in manufacture, is that the wares produced should be very great in quantity, so that the smallest advantage in

the power of working, being multiplied a million fold, shall turn the scale of profit. And thus such machinery is applied when wares are manufactured for a vast population;—when millions upon millions have to be clothed, or fed, or ornamented, or pleased, with the things so produced. I have heard one say, who had extensively and carefully studied the manufacturing establishments of this country, that when he began his survey he expected to find the most subtle and refined machinery applied to the most delicate and beautiful kind of work—to gold and silver, jewels and embroidery: but that when he came to examine, he found that these works were mainly executed by hand, and that the most exquisite and the most expensive machinery was brought into play where operations on the most common materials were to be performed, because these were to be executed on the widest scale. And this is when coarse and ordinary wares are manufactured for the many. This, therefore, is the meaning of the vast and astonishing prevalence of machine-work in this country: —that the machine with its million fingers works for millions of purchasers, while in remote countries, where magnificence and savagery stand side by side, tens of thousands work for one. There Art labours for the rich alone; here she works for the poor no less. There the multitude produce only to give splendour and grace to the despot or the warrior whose slaves they are, and whom they enrich; here the man who is powerful in the weapons of peace, capital and machinery, uses them to give comfort and enjoyment to the public, whose servant he is, and thus becomes rich while he enriches others with his goods.

If this be truly the relation between the condition of the arts of life in this country and in those others, may we not with reason and with gratitude say that we have, indeed, reached a point beyond theirs in the social progress of nations?

I have, perhaps, detained you too long with these general reflections, suggested by the mere general aspect of that great display of the works of nations in every stage of progress, which we have had lately before our eyes. But I hope you will recollect, that I began by claiming the privilege of speaking as a mere spectator, who had not had occasion to study the objects there assembled in a special and official manner. There is, however, one view of the subject, perhaps a little less obvious, which I should wish to endeavour to bring before you: I mean, the view suggested by the *Classification* of which such a collection has been found to be capable. Perhaps, at the first thought, it might be supposed to divide any collection of things, however numerous and various, into classes, is a work of no great difficulty, though when the collection is great it may require much time. For, it might be said, You have only to determine according to what resemblances and what differences you will make your classes, and then to go through the work, sticking to these. But any one who has attended a little more to the science of classification, or even who has made the attempt on any considerable scale, knows that this is not so: and that except the scheme of classes be very skilfully and very happily devised, it lands us in intolerable incongruities and even in impossibilities. Indeed, without seeking any exemplification of this remark in the classifi-

catory sciences, which can throw on this subject only a distant and doubtful light, we have experimental evidence of the difficulty of classifying a great collection of the products of art and industry, in the attempts which were made to perform that task on the occasions of the French *Expositions* in 1806, in 1819, in 1827, in 1834, and in 1844. On the first occasion, the distribution adopted was entirely geographical; on the second, it was what was called an entirely material or natural system, dividing the arts into thirty-nine heads, the consequence of which is said to have been great confusion. In 1827 a purely scientific arrangement was attempted, into five great divisions, namely, *chemical, mechanical, physical, economical,* and *miscellaneous arts.* But this was deemed too artificial and abstract, and in 1834 M. Dupin made the division depend on the relation of the arts to man, as being *alimentary, sanitary, vestiary, domiciliary, locomotive, sensitive, intellectual, preparative, social.* This analysis was also adhered to in 1839. In 1844 an attempt was made to unite some features of the previous systems, and the objects were classified as *woven, mineral, mechanical, mathematical, chemical, fine arts, ceramic,* and *miscellaneous;* which was still complained of as confused, but which was, on the whole, retained in 1849.

I do not think there is any presumption in claiming for the classification which has been adopted in the Great Exhibition of 1851 a more satisfactory character than we can allow to any of those just mentioned, if we ground our opinion either upon the way in which this last classification was constructed, or upon the manner in which it

has been found to work. And there is one leading feature in it which, simple as it may seem, at once gives it a new recommendation. In the systems already mentioned there were no *gradations* of classification. There were a certain number, thirty-nine or five, nine or eight, of co-ordinate classes, and that was all. In the arrangement of the Great Exhibition of 1851, by a just and happy thought, a division was adopted of the objects to be exhibited into four great *Sections*, to which other *Classes*, afterwards established, were to be subordinate; these sections being *Raw Materials, Machinery, Manufactured Goods, and the works of the Fine Arts.* The effect of this grand division was highly beneficial, for within each of these sections classes could be formed far more homogeneous than was possible while these sections were all thrown into one mass: when, for instance, the cotton-tree, the loom, and the muslin, stood side by side, as belonging to *vestiary* art; or when woven and dyed goods were far removed, as being examples, the former of *mechanical*, the latter of *chemical* processes. Suitable gradation is the *felicity* of the classifying art, and so it was found to be in this instance.

But within this limit how shall classes be formed? Here, also, it appears to me, simply as a reader of the history of the Exhibition, which any one else may read, that the procedure of those who framed the classification was marked with sound good sense and a wise rejection of mere technical rules. For by assuming fixed and uniform principles of classification we can never obtain any but an artificial system, which will be found, in practice,

to separate things naturally related, and to bring together objects quite unconnected with each other. It was determined, that within each of the four sections the divisions which had been determined by commercial experience to be most convenient should be adopted. "Eminent men of science and of manufactures in all branches were invited to assist in drawing each one the boundaries of his own special class of productions."* And it was resolved, for the general purposes of the Exhibition, to adopt thirty broad divisions; of which Classes, 4 were of Raw Materials; 6 of Machinery; 19 of Manufactures; and 1 of the Fine Arts. And these thirty Classes may be considered as having been confirmed by their practical application to the collection, and to the work of the juries in dealing with it; except that, in some instances, it was found necessary to subdivide a class into others. Thus, Class X., which was originally described as Philosophical Instruments, was found to consist of materials so heterogeneous, that there were separated from it three classes, of Musical, of Horological, and of Surgical Instruments. And to Class V., Machines, was added an Accessory Class, V *a*, Carriages. And, on the other hand, Classes XII. and XV., Woollen and Worsted, it was found could be advantageously thrown into one.

Within these Classes, again, were other subdivisions, which were marked in the Catalogue by letters of the alphabet. Thus, the Third Class consists of *substances used for food;* and of these the vegetable division con-

* "Illustrated Catalogue," Introd. p. 22.

tains *Sub-classes*, A, B, C, D, E, F, G: the *first* being *cereals*, and the like; the *second*, *fruits*; the *third*, *drinks*, and so on. And in like manner, the Sixth Class, *manufacturing machines and tools*, had Sub-classes, A, B, C, D, E, F: as A, all *spun and woven fabrics*; B, *manufactures of metals*; C, *manufactures of minerals and mining machinery*, and the like.

And, again, each of these Sub-classes was separated into Heads, by numbers. Thus, the Sub-class, *cereals* and the like, are, 1, the *common cereals*; 2, the *less common*; 3, *millet*; 4, *pulse and cattle-food*; 5, *grasses and roots*; 6, *flours* (ground grain); 7, *oil seeds*; 8, *hops*. And the Sub-class A, of *manufacturing machines and tools*, included the Heads, 1, *machinery for spinning and weaving cotton, wool, flax, hemp, silk,—for working caoutchouc, gutta percha, hair*; 2, *paper-making*; 3, *printing*. And to show how much practical experience governed these sub-divisions, I may mention, that great aid in this task was found in the Trades' Directories of Birmingham and Manchester, and other great manufacturing towns.

I have followed this classification into the ultimate ramification of the Catalogue, at the risk of being, I fear, tedious for a moment; partly because I wish to make a reflection upon it; and partly, also, that you may see what a vast work is performed if this classification be really coherent and sound. For, first, turn your attention to the one Head which I have mentioned: this single Head includes no less than this,—all machinery for the complete formation, from the raw material, of all fabrics of cotton, wool, flax, hemp, silk, caoutchouc, gutta percha, and hair. This is Head 1

of Sub-class A. Under this Head, or under the first Particular Head, *cotton*, are very many *Articles* in the Great Exhibition. Besides this Particular Head, and the other Particular Heads, *wool*, *flax*, *caoutchouc*, &c., included in the General Head 1, there are two other Heads in this Sub-class, each of like extent. Along with this Sub-class A, are also Sub-classes B, C, D, E, F, each of an extent not much inferior to A; and thus, this Class VI. contains a great mass of Heads, each including a vast number of Articles. Yet, in the Catalogue, this Class VI. is one of the smallest extent of all the thirty. And though this may arise in part from some of the others being followed out into greater comparative detail than this Class VI., yet still enough will remain in this mode of putting the matter to show to you how vast and varied is the mass of objects which has thus been classified, and how great the achievement is if this mass have really been reduced into permanent order; if this chaos, not of elements only, but of raw materials mixed with complicated machines, with manufactured goods and sculptured forms, have really been put in a shape in which it will permanently retain traces of the ordering hand.

What the value and advantage would be of a permanent and generally accepted classification of all the materials, instruments, and productions of human art and industry, you will none of you require that I should explain at length. One consequence would be that the manufacturer, the man of science, the artisan, the merchant, would have a settled common language, in which they could speak of the objects about which they are concerned. It is needless

to point out how much this would facilitate and promote their working together; how fatal to co-operation is diversity and ambiguity in the language used. One of our old verse writers, expanding, according to the suggestions of his fancy, the account of the failure of men in the case of the tower of Babel, has made this cause of failure very prominent. He supposes that, the language of the workmen being confounded, when one of them asked for a spade, his companion brought him a bucket; or when he called for mortar, handed him a plumb-line; and that, by the constant recurrence of these incongruous proceedings, the work necessarily came to a stand. Now the conditions necessary, in order that workmen may work together, really go much farther than the use of a common language, in the general sense of the phrase. It is not only necessary that they should call a brick a brick, and a wire a wire, and a nail a nail, and a tube a tube, and a wheel a wheel; but it is desirable, also, that wires, and nails, and tubes, and wheels, should each be classified and named, so that all bricks should be of one size, so that a wire number 3, or a tube section 1, or a six-inch wheel, should have a fixed and definite signification; and that wires, and tubes, and wheels, should be constructed so as to correspond to such significations; and even, except for special purposes, no others than such. It may easily be conceived, for instance, how immensely the construction, adjustment, and repair of wheel-work would be facilitated, if wheels of a certain kind were all made with teeth of the same kind, so that any one could work in any other. And something of this sort, something which secures some of these and

the like advantages, has been done with reference to cast-iron toothed wheels. And an eminent engineer, whose works stood in the Sixth Class of the collection to which I have just referred, has proposed a system by which a like uniformity should be secured in the dimensions and fitting of machinery; and especially with regard to screws; fixing thus their exact diameter and pitch, as it is called—a process which would have the like effect of making the construction, application, and repair of all work into which screws enter vastly more easy and expeditious than it now is. Now these are the great and beneficial effects which follow from a good and generally accepted sub-classification of one of the lowest members of that classification which the Catalogue exhibits to us. Mr. Whitworth would classify screws, and wheels, and axles, as the millwrights have classified toothed wheels. But screws, or wheels, or axles, are merely one kind of tool, one element of machinery; and tools and machinery are only one class out of thirty of the great collection of which we are speaking. If, then, so great benefits arise from a common understanding as to the species of one of the lowest members of our classification, may we not expect corresponding advantages from a fixation of the names and distinctions of the higher members?—of the names of tools and machines, for instance; and from a perception of their relations to each other, which a good classification brings into view; and then, again, from a clear perception of the relation of class to class, and of their lines of demarcation? And may we not expect that on such grounds, the very language of Art and Industry, and the mode of regarding the relations of

their products, shall bear for ever the impress of the Great Exhibition of 1851?

There is one other remark which I should wish to make, suggested by the classification of the objects of the Exhibition; or, rather, a remark which it is possible to express, only because we have such a classification before us. It is an important character of a right classification, that it makes general propositions possible; a maxim which we may safely regard as well grounded, since it has been delivered independently by two persons, no less different from one another than Cuvier and Jeremy Bentham. Now, in accordance with this maxim, I would remark, that there are general reflections appropriate to several of the divisions into which the Exhibition is by its classification distributed. For example: let us compare the First Class, *Mining and Mineral Products*, with the Second Class, *Chemical Processes and Products*. In looking at these two classes, we may see some remarkable contrasts between them. The first class of arts, those which are employed in obtaining and working the metals, are among the most ancient; the second, the arts of manufacturing chemical products on a large scale, are among the most modern which exist. In the former class, as I have said, Art existed before Science; men could shape, and melt, and purify, and combine the metals for their practical purposes, before they knew anything of the chemistry of metals; before they knew that to purify them was to expel oxygen or sulphur; that combination may be definite or indefinite. Tubal-Cain, in the first ages of the world, was "the instructer of every artificer in brass and iron;" but

it was very long before there came an instructer to teach what was the philosophical import of the artificer's practices. In this case, as I have already said, Art preceded Science: if even now Science has overtaken Art; if even now Science can tell us why the Swedish steel is still unmatched, or to what peculiar composition the Toledo blade owes its fine temper, which allows it to coil itself up in its sheath when its rigid thrust is not needed. Here Art has preceded Science, and Science has barely overtaken Art. But in the second class, Science has not only overtaken Art, but is the whole foundation, the entire creator of the art. Here Art is the daughter of Science. The great chemical manufactories which have sprung up at Liverpool, at Newcastle, at Glasgow, owe their existence entirely to a profound and scientific knowledge of chemistry. These arts never could have existed if there had not been a science of chemistry; and that, an exact and philosophical science. These manufactories now are on a scale at least equal to the largest establishments which exist among the successors of Tubal-Cain. They occupy spaces not smaller than that great building in which the productions of all the arts of all the world were gathered, and where we so often wandered till our feet were weary. They employ, some of them, five or six large steam-engines; they shoot up the obelisks which convey away their smoke and fumes to the height of the highest steeples in the world; they occupy a population equal to that of a town, whose streets gather round the walls of the mighty workshop.* Yet these processes are all derived from the

* "Illustrated Catalogue," p. 184.

chemical theories of the last and the present century; from the investigations carried on in the laboratories of Scheele and Kirwan, Berthollet and Lavoisier. So rapidly in this case has the tree of Art blossomed from the root of Science; upon so gigantic a scale have the truths of Science been embodied in the domain of Art.

Again, there is another remark which we may make in comparing the First Class, *Minerals*, with the Third Class; or rather with the Fourth, *Vegetable and Animal Substances, used in manufactures, or as implements or ornaments.* And I wish to speak especially of *vegetable* substances. In the class of *Minerals*, all the great members of the class are still what they were in ancient times. No doubt a number of new metals and mineral substances have been discovered; and these have their use; and of these the Exhibition presented fine examples. But still, their use is upon a small scale. Gold and iron, at the present day, as in ancient times, are the rulers of the world; and the great events in the world of mineral art are not the discovery of new substances, but of new and rich localities of old ones,—the opening of the treasures of the earth in Mexico and Peru in the sixteenth century, in California and Australia in our own day. But in the vegetable world the case is different; there, we have not only a constant accumulation and reproduction, but also a constantly growing variety of objects, fitted to the needs and uses of man. Tea, coffee, tobacco, sugar, cotton, have made man's life, and the arts which sustain it, very different from what they were in ancient times. And no one, I think, can have looked at the vegetable treasures of the Crystal Palace without seeing that the various

wealth of the vegetable world is far from yet exhausted. The Liverpool Local Committee have enabled us to take a starting-point for such a survey by sending to the Exhibition a noble collection of specimens of every kind of import of that great emporium; among which, as might be expected, the varieties of vegetable produce are the most numerous. But that objects should be reckoned among *imports*, implies that already they are extensively used. If we look at the multiplied collections of objects of the same kind, some from various countries, not as wares to a known market, but as specimens and suggestions of unexplored wealth, we can have no doubt that the list of imports will hereafter, with great advantage, be enlarged. Who knows what beautiful materials for the makers of furniture are to be found in the collections of woods from the various forests of the Indian Archipelago, or of Australia, or of Tasmania, or of New Zealand? Who knows what we may hereafter discover to have been collected of fruits and oils, and medicines and dyes; of threads and cordage, as we *had* here from New Zealand and from China examples of such novelties; of gums and vegetable substances, which may, in some unforeseen manner, promote and facilitate the processes of art? How recent is the application of caoutchouc to general purposes! Yet we know now — and on this occasion America would have taught us if we had not known — that there is scarcely any use to which it may not be applied with advantage. If a teacher in our time were to construct maxims like those of the son of Sirach in the ancient Jewish times — like him who says (Ecclus. xxxix. 26), "The principal things for the whole

use of man's life are water, fire, iron, and salt, flour of wheat, honey, milk, and the blood of the grape, oil, and clothing" —he could hardly fail to make additions to the list, and these would be from the vegetable world. Again, how recent is the discovery of the uses of gutta percha! In the great collection were some of the original specimens sent by Dr. Montgomery to the India House, whence specimens were distributed to various experimentalists.* Yet how various and peculiar are now its uses, such as no other substance could replace! And is it not to be expected that our contemporaries, joining the insight of science to the instinct of art, shall discover, among the various sources of vegetable wealth which the Great Exhibition has disclosed to them, substances as peculiar and precious, in the manner of their utility, as those aids thus recently obtained for the uses of life?

And before we quit this subject, let us reflect, as it is impossible, I think, not to reflect, when viewing thus the constantly enlarging sphere of the utility which man draws from the vegetable world, what a view this also gives us of the bounty of Providence to man, thus bringing out of the earth, in every varying clime, endless forms of vegetable life, of which so many, and so many more than we yet can tell, are adapted to sustain, to cheer, to benefit, to delight man, in ways ever kind, ever large, ever new, and of which the novelty itself is a new source of delighted contemplation.

I might go on to make other reflections upon the

* "Illustrated Catalogue," p. 876.

peculiar characters of the various classes of the Great Exhibition, but the time does not allow me, nor is it needful, since all that I aspired to do was to offer to you specimens of such reflections. Several of the classes will, no doubt, suggest appropriate reflections to those who have to deliver lectures to you on special subjects. In the meantime, though I must now hasten to a conclusion, I cannot but perceive how imperfectly I have discharged even the limited task which I ventured to undertake. For I have as yet said nothing of the effect which must be produced upon art and science by this gathering of so many of the artists and *scientists* (if I may use the word) of the world together; by their joint study of the productions of art from every land, by their endeavours to appreciate and estimate the merits of productions, and instruments of production; of works of thought, skill, and beauty.

In speculating concerning universities, we are accustomed to think that, without underrating the effect of lectures and tasks, of professors and teachers, still that among the most precious results of such institutions is the effect produced upon those who resort thither by their intercourse with, and influence upon, each other. We know that by such intercourse there is generated a community of view, a mutual respect, and a general sympathy, with regard to the elements of a liberal education, and the business of national, social, and individual life, which clings to men ever after, and tends to raise all to the level of the best. And some such effect as this would, we may suppose, be produced upon the students of the useful and the beautiful arts by their resort to any university in

common. To *any* university, I have said; but to what a university have they been resorting during the past term? To a University of which the Colleges are all the great workshops and workyards, the schools and societies of arts, manufactures, and commerce, of mining and building, of inventing and executing in every land—Colleges in which great chemists, great mechanists, great naturalists, great inventors, are already working, in a professional manner, to aid and develope all that capital, skill, and enterprise can do. Coming from such Colleges to the central University, may we not well look upon it as a great epoch in the life of the Material Arts, that they have thus begun their university career—that they have had the advantage of such academical arrangements as there have been found, and still more, as I have said, that they have had the greater advantage of intercourse with each other? May we not expect that from this time the eminent producers and manufacturers, artisans and artists, in every department of art, and in every land, will entertain for each other an increased share of regard and good-will, of sympathy in the great objects which man's office as producer and manufacturer, artisan and artist, places before him—of respect for each other's characters, and for the common opinion of their body, all increased by their being able to say, "We were students together at the Great University in 1851?"

November 26, 1851.

LECTURE II.

MINING, QUARRYING, AND METALLURGICAL PROCESSES AND PRODUCTS.

BY

SIR HENRY T. DE LA BÈCHE,

C.B., F.R.S.

SIR HENRY T. DE LA BECHE

ON

MINING, QUARRYING, AND METALLURGICAL PROCESSES AND PRODUCTS.

MINERAL matter, unlike animal and vegetable substances, cannot, in its original or natural state, be modified by man for his use. While he can obtain important varieties of animal substances, by treatment of the animals themselves, or by perpetuating certain varieties of them, and can, by culture, produce valuable modifications in plants, or their parts, no skill of his can alter the natural condition of an ore in the mine. His power commences with that of discovering the mineral matter required by him. Mineral substances have thus to be regarded, industrially, as essentially connected with the means of extraction and the after processes by which they are rendered available for use. While plants and animals differ in various regions of the earth, and the traffic connected with the raw materials they afford is adjusted to this difference, mineral matter of the same character may be discovered in any part of the world, at the Equator or towards the Poles; at the summit of the loftiest mountains, and in works far beneath the level of the sea. The granite of Australia does not neces-

sarily differ from that of the British Islands; and ores of the metals may (the proper geological conditions prevailing) be found of the same general character in all regions. Climate and geographical position have no influence on the composition of mineral substances.

Though geographical position has no influence on natural mineral substances, except so far as modifications may be produced by the action of the atmosphere, it may, nevertheless, constitute a most important element among those on which depend the actual uses of those substances. All other conditions being equal, it may decide their extraction or non-extraction. Even important minerals may be so situated as to be unproductive of advantage to those endeavouring to obtain them for use. No doubt, geographical position may be modified by the labour of man, and so that the mineral matter in the same locality, which could not be profitably raised at one time, may be most advantageously worked at another. The condition of man, therefore, occupying different areas on the earth's surface as nations, becomes an element of the utmost importance as regards the useful extraction of mineral substances. The conditions under which such divisions of mankind may exist, their laws and customs, are important to the developement of any mineral wealth, as it were, latent in the areas occupied by them. These may either tend to impede or promote that developement; and the different divisions of men may, by their regulations, act most variably on each other, and, instead of advancing their common good, introduce systems of mutual checks, to the disadvantage of all.

The more advanced a nation, the greater, under equal general conditions, is its power over the disadvantages which may happen to be presented by geographical position, thus producing facilities for the developement of its mineral wealth. The cost of transport—that frequent impediment to the profitable working of mineral substances—may become so lessened by addition to easy communications of various kinds, that finally the working of mineral substances can be changed from unprofitable to profitable. In the cases of many ores, these and the fuel needed for smelting them may be brought together by facility and cheapness of conveyance, so that industries, new to a land, may spring up.

Although man, by his general advance, may thus accomplish much for the developement of mineral wealth, there are natural limits to his progress which cannot be overcome. Although he may effect the easy transport of mineral matter over rivers and valleys, and even through portions of the earth itself, either by his canals or his roads, and thus, as regards such transport, change the face of a country from one of difficulty to one of facility, the greater geographical arrangements remain unaltered. He cannot change an inland country, in the central position of a continent, to a maritime state, though he can materially modify its position as to the ready means of transport to the coast. An inland locality may pour in its mineral products, by means of increased facilities of transport, upon a sea-port, so that not only may they replace similar substances produced at greater cost near such a port, but, by means of the sea, be transported even

far to other lands, competing in their markets, should the regulations of the nations holding them permit, with those which had hitherto satisfied them.

The profitable developement of mineral wealth will, therefore, depend upon the natural occurrence of mineral substances, due to geological causes—upon the geographical position of the localities where the useful mineral substances are present,—and upon the condition of man in a given area. The first condition is unalterable by man, the remaining two may be most materially modified by him.

As mineral matter in its first, or natural state, cannot be modified by man, it becomes important that when specimens of it are shown as illustrative of mineral wealth, especial reference should be made to those processes by which such mineral matter is rendered useful. Without this precaution much misconception may arise. Let us, for example, consider the ores of the metals. The mere exhibition of any ore, however rich, is in itself of little value beyond the information that the specimen came from some stated locality. The circumstances connected with its mode of occurrence, and with the means at command to render its extraction useful, are essential. Pieces of rich ores are of frequent occurrence in localities where, from a want of their sufficient abundance, it would be useless to attempt any profitable working of them. Hence collections of ores may often be most fallacious, indeed it is unfortunately somewhat too common to find specimens of ores shown as the ordinary products of mines where they are really rarities, for the purpose of promoting the purchase

of shares in such mines. There is a name for such specimens in Cornwall, where they are termed *Slocking stones.* These really come from the mines, but they are unfair representations of their produce.

Again, it often happens, that without the slightest intention of producing erroneous impressions, proprietors or agents, when requested to transmit specimens of their ores, will select, instead of such as show the general quality of those raised, some fine example of their best ores, a *good stone of ore,* as it is often technically termed, while at the same time the mine itself may be returning large profits by the working and dressing of comparatively poor ores, operations of which the agents might be justly proud; not the slightest deception is intended, but nevertheless a collection of such specimens becomes extremely fallacious, and conceals and does not exhibit the real industry both required and employed. The teaching influence proposed by collections of ores is defeated alike by both the causes above mentioned. Most important knowledge of its kind is sacrificed, and the public misled by impressions received from gazing on a mass of glittering objects, instead of carefully considering the kind of mineral substances which really produce, by the industry of man, the metals so essential for his welfare and progress.

As these Lectures are not intended to interfere with the reports of the juries, it would be out of place to enter upon systematic details respecting the class now under consideration. Ample information will be found regarding these in the report of my colleague, M. Dufrénoy, than whom no one could be better qualified for the task, by

talents, experience, position, or love of justice. Looking at the Exhibition as the means to a great end, and not the end itself, its bearing on the future may, probably, be best illustrated by a selection of subjects, which should show deficiencies as well as important exhibitions. The one may be as valuable for progress as the other, if carefully considered and rightly understood.

As fuel is at the base of all the operations the products of which have found a place in the late Exhibition, the power of producing fire being peculiar to man, and one without which his range on the earth's surface would be very limited, and his advance trifling, it may, in the first instance, be desirable to glance at that portion of fuel which is included in Class I.

All our mineral, or, as it has been termed, fossil fuel, is derived from vegetable matter, the growth of various geological times, and of different regions, embedded amid detrital matter of various kinds from local circumstances, and presenting modified aspects in accordance with the general physical and chemical conditions to which it has been subjected. Its chief divisions, for industrial purposes, may be regarded as lignite (the *brown coal* of the Germans), and coal, the latter of various kinds. Indeed the whole constitutes a series, at which woody matter, but slightly altered, is at one end, and stone-coal, or anthracite, is at the other. It may suffice for our present purpose, to mention that the physical and chemical conditions above mentioned are the causes of these differences, and have been of such an order that the proportion of the oxygen and hydrogen of the original vegetable substance

became gradually diminished as regards the other two component parts, carbon and nitrogen, so that the carbon greatly predominates, and stone-coal, or anthracite, is the result.

Now, the character of these fossil fuels is of the greatest importance in their varied uses, the products of many operations depending upon it, especially certain metallurgical processes. As this character does not necessarily depend upon geological age—though, as a whole, the older rocks usually contain only that state of fossil fuel known as coal of some kind,—it may be expected to vary materially in different parts of the world. The kind of fossil fuel found may determine the developement of certain branches of industry, other circumstances being favourable.

That mineral fuel should be much represented in the Exhibition was scarcely to be expected. Its presence, indeed, from lands where it was not generally known to be found might be advantageous, especially if accompanied by proper information as to its mode of occurrence, and probable abundance and power of extraction. For example, it was important to examine specimens of coal from New Zealand, and learn the thickness and dip of the beds of some of them; and inspect others from Labuan, where the Eastern Archipelago Company are now working a nine-feet bed. The importance of such localities for the supply of fossil fuel, as regards steam-navigation, is evident. Looking, however, at the demand for, and supply of, fossil fuel of various kinds in well-known lands, as for instance, in our own, it may be very much doubted if any

mere exhibition of a few specimens, without regard to general views of the manner in which the coals may be variably employed, could be viewed as instructive. There were, however, some good individual illustrations,—as for example, that of the thick or ten-yard Staffordshire coal,—showing the different working seams, alike interesting to science and coal-mining.

In this and several other cases, where huge masses of coal were sent from some of the British collieries, we have excellent examples of the disinterested aid afforded to the Exhibition. The greater proportion of these exhibitors could look for no return whatever, except the gratification of having assisted a cause which they considered to be good. It was not probable that ten tons of their coals would be altered in their mode of consumption except by new adjustments and demands not depending upon the Exhibition, though the cost they incurred was often heavy, in raising and transmitting their specimens.

As regards the coals of the world, it is well known that, though our country may not be that containing the largest amount of fossil fuel (the United States far exceeding us in this respect), it is at the present moment, nevertheless, the land in which the largest amount is raised. The annual weight raised in this country is usually now estimated as equal to 35,000,000 tons, or, taking the ton of coal as equal to about a cubic yard, more than eleven square miles of a bed of coal, three feet thick, supposing the whole of the coal removed. Of this large amount about 2,728,000 tons are exported, leaving the remainder, or 32,272,000 tons for domestic and industrial

consumption, the portion devoted to the latter being largely employed for the smelting of our ores, especially those of iron. The annual produce of our collieries may, indeed, exceed 35,000,000, and more nearly approach 40,000,000. Steps are being taken at the Museum of Practical Geology in order to obtain more correct data on this head.

As illustrative of the importance of our position as a maritime state, combined with our possession of cheap heat, well situated, the copper smelting of Swansea, with that of Neath, Tai-bach, and Llannelly in its vicinity, may be advantageously adduced. We there find, in addition to the greater portion of the copper raised in the British Islands, cargoes of that ore, and of what is termed the regulus of copper, brought round by the Cape of Good Hope from Australia in one direction, and round Cape Horn from Chili and other South American lands in another. Altogether the copper smelting of South Wales forms an excellent illustration of the advantageous union of geological and geographical conditions, combined with a state of man in a given area fitted to seize and utilize those conditions.

Though regarding the specimens of coal as such, and unconnected with processes to which they were material, the Exhibition might be defective, it contained important illustrations of the mode of occurrence and of extraction of coal. Among the maps, sections, and collections, connected with this subject, the exhibition from the coal district of Northumberland and Durham should be cited. It formed an important series of illustrations, comprising

maps, sections, specimens of the various coals, the rocks by which they are accompanied, plans of the mode of working the collieries, sections of pits, and the machinery in them, with the safety-lamps used in the district—a highly valuable series, and one formed expressly for the Exhibition. A beautiful model by Mr. Nicholas Wood exhibited the methods of working coal in the northern counties. There were others also in the English department alike instructive, as directing attention to that important subject, the ventilation of collieries, one which has so justly of late attracted public attention. Much good may, no doubt, arise from the appointment of inspectors of collieries in the different districts in this country; but the more effective saving of life from colliery explosions must be looked for in the instruction generally of the coal-miners themselves. The amount of mischief arising from the foolhardiness of ignorance in our collieries can only be credited by those who are compelled to employ men with a want of education they deplore, or who have, in discharge of duties, visited coal-mines after fearful and desolating explosions. Safety-lamps are important in connexion with this subject. In addition to those usually employed in this country, there were two from Belgium, where, as well as in France, much attention is paid to the proper ventilation of collieries by the Government authorities.

As relating to the ventilation of collieries, a model of opening and closing the doors in them, by the passage of the horses and waggons, or of the men, without the attendance of boys or others for the purpose, had very important bearings, so many accidents having occurred

from the ventilation being disarranged by leaving open such doors. It was a good case of a valuable contrivance, apparently little known beyond the colliery itself—the Foxhole Colliery, near Swansea—being made more extensively so by means of the Exhibition.

As connected in the Exhibition with collieries, though in reality applicable to shafts generally in mines, we should here mention the very important method adopted by Mr. E. Rogers of sinking shafts at Abercarn Colliery, Monmouthshire. By employing electricity in blasting, he is enabled to explode three or more holes, inclined to each other in the depth, simultaneously; and thus lifts a large mass at once from the centre of the sinking, other large masses being in like manner afterwards detached from the surrounding portions towards the sides. By thus calling in the aid of electricity, and by employing gutta-percha tubes of great size in connexion with the pumps, and so avoiding the destruction of the usual arrangements, which frequently take place during blasts while sinking a pit, better work is accomplished, with greater rapidity, and at less cost than by the ordinary methods. This successful application of science and of modern knowledge is deserving of all attention by miners.

That there has been, and unfortunately still is, great waste in our collieries, viewed as a whole, however the working of some districts may exceed that of others, (and even those not over remarkable for progress, may yet exhibit valuable exceptions), has been long known, and often pointed out. It was, therefore, an advance in the right direction, when the small coals, sometimes consumed

at the pit's mouth, at others thrown back in the workings, were used for, as they have been termed, the *patent fuels*. There are now many of them of different kinds, applicable to different purposes, according to composition. In them the small coal is usually cemented by some bituminous substance, pressure being employed. One kind in the Exhibition was shown by Mr. Azulay, in which great compression alone caused the particles of the coal-dust to cohere. In Warlich's process, specimens of which were also exhibited, after the small coal is made to cohere with some bituminous body by pressure, the resulting bricks are exposed to heat, in order to decompose the bituminous substance, the heat being graduated according to the use to be made of the fuel. This is a highly important point in the patent fuel employed for steam purposes, since, by carefully selecting a proper coal, and heating the brick so as to coke the cementing matter without injury to the coal employed, a very useful product for steam-ships may be obtained.

In the French department, and in a small case, accompanied by a description and explanatory drawing, the whole seldom heeded amid more showy objects, were to be seen some sorted and crushed coals, with a few pieces of coke, having an important bearing upon the employment of cheap and effective heat. It illustrated the method of M. Bérard for separating foreign matter, such as iron pyrites and slate, from coal. Its general principle was that of the "jigging-machine" of the miners, for separating ores, after crushing, from the stony matter with which they may be associated, by agitating the whole

in water, so that the various portions become arranged according to their specific gravities. The apparatus, which it would require the needful drawings to explain properly, is remarkably ingenious, and the result certain. In a country like ours, where coal is abundant, such a method might, at first sight, appear little wanted. The Exhibition was not, however, intended for this land alone, but for "all nations;" so that the application of such a method becomes most important in many, numerous small seams, or coals with much iron pyrites, rendering them, in common parlance, "sulphurous," and otherwise valueless, being rendered worth working by its use. Its value is, however, also understood in our country; for, we are informed, works are now erecting for its employment at Newcastle. By using the method of M. Bérard, the Chemin de Fer du Nord, France, was enabled to employ a coal previously found injurious to the locomotives, and a considerable saving was effected. The reduction of ash in the washed coal was very considerable.

Not to dwell longer upon mineral fuel, important as extended views of that subject might be, did time permit, it may now be desirable briefly to consider the ores of the useful metals. The subject of metal mining includes a consideration of the ores, as such; their mode of occurrence in the ground; the methods employed for their extraction; and the means adopted for "*dressing*" them, as it is termed, or of rendering them marketable. The smelter then receives them, and by such metallurgical processes as may be suitable produces the metal.

Respecting the fallacious impressions which the in-

spection of mere specimens of ores may convey, some remarks have already been offered. No doubt, ores commonly called of the same kind differ, by containing foreign substances, making a material alteration in the labours of the smelter. This is a subject of great importance, requiring all the skill of the metallurgist. Small additions of peculiar substances produce great modifying influences. Many a smelter finds himself at fault as to the causes of certain deteriorations of produce which the scientific metallurgist traces to the ore; and here Science steps in and aids that ordinary practice which might be sufficiently successful so long as ores of the ordinary composition—those to which the smelter has been accustomed—were operated upon.

Specimens of ores are valuable when selected to illustrate important points of this kind, or when they accompany illustrations of their mode of occurrence, modifications in consequence of that mode of occurrence, or are connected with processes and their results. With the exception of the last, the ores of the Exhibition possessed scarcely any of these conditions; indeed, some were sent from mines which, as previously mentioned, should have been justly proud of their methods of dressing ores of ordinary, and even low quality; yet the specimens transmitted were rich, requiring no refined means of treatment. There were, nevertheless, very rich specimens from some parts of the world, known to represent considerable masses of the same kind; as, for example, the Burra-Burra mines of South Australia have furnished to commerce a large amount of valuable copper ores similar to those exhibited,

and many a mass of malachite from them, which might, as in Russia, have been extensively employed in works of art, has passed beneath the hammer and crushers, and into the furnace. Small as the metal exhibition of Sweden may have been, the ores sent were good examples of those whence the fine iron of that land is obtained. In like manner, there was no reason to doubt that the rich iron ores of the United States and of Canada did fairly represent masses of the like ores in those countries; and so also with ores from some other lands. Looking, however, at those shown generally, the previous remarks were needed.

One of the most important series of ores in the Exhibition, viewed with reference to its object, and, coupled with the information with which it was accompanied, as illustrating a particular mineral produce in a given country, was that of the iron ores of Great Britain, collected and sent by Mr. Samuel Blackwell. It was formed at both much trouble and cost by its exhibitor, and for no other purpose than to render good service to the Great Exhibition, in the first place, and to the stores of the Museum of Practical Geology, to which it was presented for national use, in the second.

The ores in this collection are of two kinds; the one, known as clay ironstone—an indifferent name—is fundamentally a carbonate of iron, mingled variably with the matter of the ancient mud and silt, among which it was originally deposited, and from which it has, under geological conditions, been separated into continuous beds or ranges of nodules. The amount of metal in the ore depends upon that of the carbonate of iron in it. In the

ordinary carbonates of iron (which are still not quite pure), known as spathose iron, and of which there were specimens from Austria, the Zollverein, and other places, there is usually from fifty to sixty per cent of protoxide of iron. In the clay ironstones the metallic iron ranges sometimes up to forty per cent. The clay ironstones are most important to Great Britain, the greater part being found associated with the coal-beds in our coal measures, and so that they are worked with, or near to each other. From these ores more than 2,000,000 tons of iron are now made in this country. Besides those in the Blackwell Collection numerous specimens of these ores were to be found attached to illustrations of the products of different iron-works.

The other iron ores in the Blackwell Collection were varieties of the oxides, chiefly hæmatites, the quantity of metallic iron in which, when the ore is good, is from sixty to seventy per cent. The amount of hæmatite ores worked in this country, though they are abundant, is not comparatively considerable. It is, however, smelted alone, and there were illustrations of this in the Exhibition; and it is, also, mixed with the clay ironstones in many furnaces.

Respecting the mode of occurrence of ores—a most important point—the Exhibition did not furnish many illustrations. As regards specimens of that character, it was not to be expected that they could be readily sent. Such collections are the work of time; requiring, moreover, a constant attention to given objects of inquiry, in connexion with the general subject, as is abundantly proved

by the difficulty experienced by all mining schools in satisfying these requirements. We have a fine illustrative collection of this kind at the Museum in Jermyn Street, but it took us sixteen years, with all our opportunities, and the hearty co-operation of able men in the mining districts, to obtain it. It is by no means easy to find proper illustrations, in sufficiently moderate volume for exhibition, of some of the chief facts observable in a mineral vein, or lode, often only to be seen on the great scale.

With respect to the mode of occurrence of the metalliferous ores, it may, in all its generality, be regarded as twofold, in beds or layers, or filling cracks, fissures, and other cavities. The clay ironstones, and certain oxides, known as bog-iron ore, belong to the former division. The alluvial, or other detrital beds, in which gold is found, as in California, Australia, Russia, and many other lands, may be considered as also included in it. So, likewise, such deposits as the cupriferous slates of Mansfeld, of which there were specimens in the Zollverein department. The sections on the wall, horizontal and vertical, will show the mode of occurrence of the clay ironstones with the associated coal-beds in Merthyr Tydvil, the chief locality for iron-works in South Wales. In such districts some beds of ironstone, and in the sections before you many are shown, bearing various names, often present constant characters for considerable distances, while others are more variable in composition and thickness.

Looking at the auriferous beds in some regions, even those from which much gold may, as a whole, be obtained,

we must often regard the mode of occurrence of the metal as, taken with the bed, to represent a poor ore. When, as in some of the Russian gold washings, two hundred tons of the detrital mass have to be washed and examined, to obtain a single pound weight of gold, it can be viewed as little else.

The best illustration to be found in the Exhibition of the mode of occurrence of the clay ironstones and associated coal, was that afforded by the beautiful model accompanying the Ebbw Vale collections: the sequence in which, from the coals, ironstone, and limestone used, through the models of the furnaces to the various products, was highly instructive and creditable to the Company exhibiting them. The model was formed of an original part made by Mr. Thomas Sopwith (so well known for his skill in that department as well as in others), to which the Company had added a continuation. The model is constructed to a common scale for height and distance, the surface represented to correspond with the actual ground, with the rivers, roads, fields, and buildings, while the lower part exhibits—every coal and ironstone bed being shown—the true relative positions of the various beds, with the works which have been carried on upon them. Considering how completely these models may be made to record all the workings, and how far superior they are to the usual plans and sections, it appears surprising that they should not be more used than they are, affording, as they do, such clear and accurate information to all interested.

As to illustrations of the mode of occurrence of ores in mineral veins or lodes, the most instructive and important

were specimens of part of the silver lode of Kongsberg, Norway; and of part of the lead lode of Grassington, Yorkshire, sent by the Duke of Devonshire. A few large lead specimens in the English department exhibited points of interest; and these, with some specimens in the South Australian copper series, certain of the iron and zinc series in the American collection, a few specimens from Canada, a few mining sections from Cornwall, and those accompanying the exhibition of the lead series of Allenheads, Northumberland, may be said to complete the illustrations of this kind. The means of extracting ores from the metalliferous mines were but slightly represented. There were illustrations of safety fuzes for blasting, some methods of raising and lowering the miners and for raising the ores, and a few Cornish mining sections. With reference to this subject, however, a large and beautiful model of water-wheels, connected with pumps from the Devon Great Consols Coppermines, requires especial mention. The dressing of ores did not receive overmuch illustration. There was a good model representing the methods of dressing the inferior copper ores of Tywarnhayle mines, Cornwall; and it may be deserving of remark that, although the produce of Cornish and Devonian ores does not exceed an average of about eight per cent of the metal after the ores are dressed, the mines of that district have been estimated as furnishing one-third of the copper raised throughout other parts of Europe, and the British Islands. The Truro committee sent good illustrations of preparing tin ore for the smelter, and there were also some other illustrations of dressing tin ore. The lead-dressing of the

Allenheads mines, Northumberland, was well shown; and the Kongsberg (Norway) series exhibited the dressing of the silver ores of those mines in a detailed manner.

With respect to the metallurgical processes and the metals produced, the case was different, more especially as regards iron. This metal, the most important to mankind, formed the chief feature in Class I., whether in the British or Foreign departments. There were some excellent illustrations from different British iron-works, including the ores and fuel employed. The various kinds of iron were well exhibited. The Ebbw Vale exhibition contained a model showing the method adopted at those works for utilizing the gases evolved from the surface. The proprietors of the Low Moor and Bowling Iron-works did not forget their old reputation for iron, and exhibited some remarkable specimens. As a general illustration of British iron, that of Mr. Bird may be cited. Some remarkable pieces were to be there found from various works and districts. Among them was probably the largest bar of iron ever rolled, being seven inches in diameter and twenty feet one inch long: this was made by Messrs. Bagnall, of West Bromwich, and weighed nearly one ton and three quarters. There were some fine examples in this collection of large drawn tubes, and others illustrating the qualities of the various irons. Canada and Nova Scotia exhibited their iron: some bar-iron of good quality from the former was remarkable for being manufactured from bog-iron ore, not usually found good for bar-iron.

The Austrian series of iron was excellently well displayed, and very illustrative. Many parts of the series

showed the ores whence the metal had been obtained, with the various parts of the processes, including the slags. In this collection was a most remarkable example of the fine rolling of iron, the latter itself being necessarily of excellent quality. The "iron paper," as it was termed, from Neudeck, in Bohemia, was superior to all of its kind in the Exhibition. It may not be out of place here to cite this Bohemian "iron paper," in illustration of some of the useful effects of the Great Exhibition. It soon attracted the attention of those skilled in iron, as such thin rolled iron is important for button-making. A spirited party, connected with the iron trade, at once proposed, in a proper quarter, to imitate this Bohemian product. This was attempted, and, though the result was not quite equal to the original, before the Great Exhibition closed thin rolled iron of a quality not heretofore produced in this country was to be had in the market.

There were good illustrations also of the Belgian iron, as employed for various purposes. Though Russia did not put forth her strength in fine iron, there were, nevertheless, some excellent examples of it, both from her imperial and private works. Some specimens of sheet-iron were remarkable for their quality. Sweden was deficient in that iron for the quality of which she is so celebrated; and France, though raising a large quantity of iron, was scarcely represented in that metal. There was but little iron in the Zollverein department. The Siegen iron, produced from the carbonate and hydrated oxide, was not, however, neglected; and the illustrations of iron from Nassau were effective, as were, indeed, those of the general mineral

produce of that state. Spain sent some of her iron, and the United States forwarded some good illustrations of theirs.

The Exhibition may be said to have given rise to the most complete view of the iron produce of this country which we possess. Mr. Samuel Blackwell, himself an ironmaster, accompanied the collection of iron ores, previously mentioned, by a statement of great value. He estimates the gross annual production of iron in Great Britain to be now upwards of 2,500,000 tons. "Of this quantity, South Wales furnishes 700,000 tons; South Staffordshire (including Worcestershire), 600,000 tons; and Scotland, 600,000 tons. The remainder is divided among the various smaller districts." The iron of England and Wales was produced by 336 furnaces in blast in 1850. Though a considerable quantity of British iron is exported, a very large proportion remains to be variously employed in our own industry.

With regard to copper, the chief illustration of its smelting, as practised in this country, came, as might be expected, from Swansea, where, as has been already stated, so much of the copper ore, not only of the British Islands, but of other parts of the world, is converted into metal. The series sent was important. The Messrs. Bankart exhibited illustrations of their patent process of reducing copper ores. Though referred to Class II., mention should be here made of Mr. Longmaid's process of reducing copper ores. In it the sulphuret of iron and copper, known as copper pyrites, is roasted with chloride of sodium (common salt). Sulphate of soda is produced, the copper is

converted into a soluble sulphate, the iron left, and the chlorine liberated. The copper is then thrown down from its solution. There was also copper from the smelting works, Bruce mines, Lake Huron, Canada; and the Burra-Burra copper ores were accompanied by copper smelted at their works, recently established at those mines. In the Zollverein department were to be found illustrations of the processes followed in extracting the copper from the cupriferous state of Mansfeld, and those also showing the manner of obtaining the silver from the same beds. Rolled copper was exhibited in the Russian department; a few pieces of copper were sent by Austria, and others from the Röraas Works, Norway; a cake of copper, with the ores from which it was obtained, was sent from the mines at Montecatini, Tuscany; copper, accompanied by specimens illustrating the method of its smelting, was exhibited from Rio Tinto, Spain, as also some fine copper from Seville. Regarded as a whole, the copper exhibition was defective.

As to lead, the illustrations were chiefly British. There was an excellent exhibition of Pattinson's important process for desilverizing that metal—a process which has been of such service to lead-mining generally, rendering many lead-mines workable with profit which must otherwise have been abandoned. The chief ore whence lead is extracted is that known as galena, or the sulphuret of lead, furnishing from seventy-five to eighty-three parts of the metal, according to purity. It usually, though not always, contains silver in variable proportions. Upon the quantity of silver often depends the profitable raising of the ore. Previous to the invention of Mr. Pattinson (of Newcastle-

upon-Tyne), about twenty ounces of silver in the ton of lead were required to render the extraction of that metal worth the cost, since then as little as three and four ounces in the ton of lead will repay extraction. Now, as so many ores contain small quantities only of silver, the importance of the process is evident. In a scientific point of view it is one of much interest, as it consists in so conducting the work that portions of the lead can crystallize, by which the silver becomes excluded, in the manner in which, in many crystallizing processes, foreign substances are excluded during crystallization. Thus, by degrees, a mass of mixed lead and silver is left, extremely rich in the latter. When this richness in silver arrives at the point desired, that metal is extracted, in the usual manner, by cupellation. The lead-smelting at the Allenheads mines, and at the Wanlock Lead Hills, Dumfriesshire, both excellently displayed, are both founded on Pattinson's process. While touching on the Wanlock Lead Hills exhibition, we should not pass over the arrangements by which the fumes from the furnace are prevented from escape, and from damage to the surrounding country, while lead, to the amount of thirty-three per cent from the deposits, or "fume," is obtained.

The Grasshill mine, Teesdale, transmitted illustrations of its lead-smelting, accompanied by sheet-lead and lead-pipes. The Snailbeach lead-mine, Shropshire, also sent sheets and pipes. From Cornwall, also, and from Ireland, there were examples of lead products. There was also some lead from Bleyberg and Vedrin, Belgium; from Spain; from Tuscany, and the Zollverein. The foreign

examples of this metal were, however, inconsiderable, viewed as a whole, the chief part of the lead exhibition being British. As illustrating both the good quality of the metal, as well as a proper method of drawing it, we should not pass over the stall of M. Poulet, in the French department, containing lead wires and tape, or spun lead, as it was termed.

With regard to zinc, the chief exhibition was that of the Vieille Montagne, Belgium, dispersed in the Belgian, French, and English departments. This establishment is the most considerable of its kind in the world. The illustrations of its produce, sent by the Company to whom it belongs, were alike remarkable for their abundance, variety, and importance. The establishment now employs 2646 persons, and it produced 11,500 tons of zinc in 1850. With the exception of some ingots of zinc from the Eschweiler foundries, Stolberg (Zollverein department), and others from the Sterling Hill Mine, New Jersey, there would appear to have been no other illustrations of zinc smelting and drawing.

As respects tin, a very important process for separating wolfram (tungstate of iron) from tin ore, was sent by Mr. Oxland, the inventor, from the Drake Walls Tin Mine, on the Cornish side of the Tamar. It may be termed a mixed process of dressing and smelting. Much difficulty arises in the dressing of tin ore when wolfram is present, as too often is the case in Cornwall and Devon, the specific gravity of the two being so nearly alike, that of the tin ore (peroxide of tin) being 7, and of wolfram, 7·1. After crushing, or otherwise pounding, the mixed substances,

they are roasted, and the wolfram still remaining unaffected, after again washing they are roasted with carbonate or sulphate of soda, and the process so conducted that the tungstic acid leaves the iron and combines with the soda, thus decomposing the wolfram, and tungstate of soda being formed, the tin ore (commonly termed *black tin*) is then fitted for further treatment in the smelting-house. The ordinary method of smelting tin in Cornwall was shown by a model (sent by Mr. Bolitho, Penzance,) of the reverberatory furnace employed, accompanied by specimens of the various ores as prepared for smelting, and of the products of that process. The tin of Cornwall and Devon has long supplied the chief portion of that consumed in Europe and on the shores of the Mediterranean. In 1850, 10,052 tons of the ore were raised. Taking the ore at 50*l.* per ton, it would have a value of 500,000*l.* in that state in 1850. Tin is now imported from other lands. In 1850, 1798 tons of tin, chiefly from Banca, were imported; and 2211 tons were exported; showing that only 413 tons of British tin found its way elsewhere, the chief part of our tin produce being reserved for our own industry, for which it is in many ways so important. Tin was shown from the Malay peninsula; from Schlaggenwald, Bohemia, and from the Avion mountains, Spain.

Respecting silver, Pattinson's important process has been already mentioned. Attached to its illustrations was a large mass of silver, weighing 3000 ounces, well showing the "spitting," as it has been termed, which takes place while the mass was cooling. In the Allenheads series there was a cake of silver, prepared by the same method,

weighing 8000 ounces. The Kongsberg collection was completed by proper illustration of the silver itself. There was also smelted silver from Prince's Location, Lake Superior, Canada; from the Almeria mines, Spain; and from Eschweiler mines, Stolberg (Zollverein).

As to gold, there were examples of it from Canada, India, the United States, and West Africa. There was also a remarkable specimen of gold from Chili.

The most important exhibition connected with gold was that from Reichenstein, in Silesia. It afforded an excellent example of an application of science by which ores previously profitless became valuable; indeed, the mines had been abandoned for five centuries on account of their poverty, though known to be auriferous. It is not the precious character of a metal in a mine that renders it important, but its relative amount, making the difference between profit and loss in obtaining it. The Reichenstein case is one where the progress of science rendered a working profitable not previously so. The process adopted was that of Professor Plattner, of Freiberg. The ores of the Reichenstein mines are arsenical pyrites, containing about 200 grains of gold in the ton. These are roasted in a reverberatory furnace, surmounted by a large condensing chamber, on which the arsenic is deposited, as it rises in fumes. Oxide of iron, a certain quantity of arsenic, and the gold in the ore, remain beneath: These are placed in a vessel, so that a current of chlorine gas is transmitted through them. The gold and iron are attacked, are separated from the residue by solution in water, and the gold is precipitated by sulphuretted hydrogen. The importance

of the process is evident; and it is but justice to Dr. Percy to state, that at the meeting of the British Association at Swansea in 1848, he advocated the employment of chlorine for a similar purpose.

With respect to the metals platinum, palladium, iridium, and rhodium, they were shown in their different metallurgic states by Messrs. Johnson and Matthey; and the method of reducing antimony was well illustrated by Mr. Hallett.

We have entered into some detail on the subject of the metals, in their various states, from the ore in the mine to the metals themselves, not only from the importance of the subject, but also in order to show the character of the Exhibition as regards this portion of it. It will have been observed, that no mention has been made of some important metalliferous countries, and that, even as regards others, metallic products for which they have been long known have not been noticed as coming from them. Those old cradles of European mining, Saxony and the Hartz, did not transmit any of their products, nor any illustrations of their mining operations; neither were the mining regions of Mexico and the South American States represented, except indeed by a remarkable specimen of silver, and another of gold, from Chili. As a general fact, and one well known to all who had to investigate the subject, though here and there important exhibitions were to be found, mining generally, even that of our own country, required far more illustration than it received. Let us not, however, be surprised at this; the marvel was, fairly regarding the conditions under which the collections were

made, that so much had been accomplished, not so little. In no department of the Exhibition will have been found more perfect disinterestedness on the part of the exhibitors. The honest miner, not forwarding specimens of ores for the purpose of exciting attention to shares in his mines, could gain nothing by sending illustrations of his ores and methods of preparing them, and yet the cost of transmitting such heavy articles was considerable. The collector and describer of the important series of British iron ores will not dispose of a ton more of his iron for all the trouble and expense which that collection has occasioned him. The same with numerous others. All these were thorough good-will offerings to a cause considered good, and, as such, are deserving of all public acknowledgment.

The class under consideration also included steels and the alloys generally of the metals considered as raw materials. The first was an especial difficult subject to treat without reference to other classes where that metallic substance was employed, seeing that the various kinds of steel had to be made for the work for which they were intended. As, for example, in the Sheffield department, raw steel was shown, with one exception, in connexion with the various manufactures it contained. Fitting steel was to be found with the files, the springs, or the cutlery, as the case required. As steel is usually made, in this country, from Swedish and Russian iron, the steel of Mr. Solly, of Leabrook, made with British iron, and exhibited, should be mentioned.

As a steel exhibition alone the most illustrative collec-

tion was that sent by Messrs. Naylor, Vickers, and Co. It was accompanied by a large and beautiful model of the furnaces, rolling-mills, and forge, and was, altogether, a most effective display of British steel. In the Zollverein department there was a remarkable exhibition of steel by M. Krupp, of Essen, Dusseldorf; but here again it was difficult to separate a consideration of the raw material from the rolling-mills and other objects to which it was applicable. A broken cylinder of this steel, measuring fifteen inches in diameter, was particularly remarkable. There were illustrations of steels from various lands, and they, with the irons, may be regarded as the most effective part of the metallic collections in the Exhibition.

With regard to brass, there was little that came within Class I., but the most important considered in it was the series exhibited by the MM. Estivant, of Given, France. It was an excellent collection, composed of articles of ordinary manufacture at their establishment, often of great size and difficulty of execution. Though employing the usual mixtures of copper and zinc, it is stated that especial measures are adopted by which the fine products shown are constantly obtained. There were rolled bars and tables of considerable dimensions, as well as excellent laminated brass of extreme thinness.

In the English series some alloys of iron with different metals were shown by Mr. Stirling. Articles made with them were also exhibited, and these alloys were stated to have some remarkable properties. There were varieties of other alloys in the Exhibition, many of considerable importance; but these were usually so combined in manufac-

tures as not to come under Class I. There was, however, a case containing 176 specimens of the useful metals and their alloys, shown by Mr. Jordan, of Manchester, which should not be passed over without adverting to its very useful character.

Plumbago, or black-lead, as it is so erroneously termed, should, perhaps, have been noticed after the coals, seeing that it is a substance chiefly composed of carbon with some admixtures of other substances, not unfrequently iron. The importance of plumbago for the arts and for crucibles is well known. After the Borrowdale mines, Cumberland, were somewhat exhausted, it became important, for that variety of plumbago employed in arts, to obtain some substitute; and varieties of compounds were invented, but nothing succeeded so well as the compressing process patented by Mr. Brockedon, of which illustrations were in the Exhibition. By this process much of the Borrowdale plumbago dust has been utilized with advantage. It, or any other good plumbago, is ground into fine powder, placed in packets, and then receives a pressure equal to about 5000 tons. To prevent the injurious effect of disseminated air in the packets of fine powder, it is extracted by means of an air-pump, and thus the particles themselves can be brought into close juxtaposition and forced to cohere. Of the application of plumbago to crucibles there were several examples, some well known for their quality.

Of building stones it could not be expected that there would be many not British. There were, however, a few specimens in other divisions. The most important series

was that of Messrs. Freeman, of Westminster, where the various stones employed in London for architecture and engineering found their places. Dispersed illustrations of similar stones were also to be seen in other departments.

With respect to marbles, serpentines, porphyries, and granites, it is needful to refer to other classes for a proper appreciation of those exhibited, many being only to be found in a worked state. Taken as a whole, they were fairly represented. The British was an effective exhibition, more especially when regarded with reference to the mode of work employed. Marbles were sent from France, Belgium, Spain, Portugal, Italy, Greece, the German States, India, and even from South Africa. In foreign porphyries and granites there was no great display. The porphyry and granite of Sweden were, however, not forgotten; neither were the granites of the Vosges, France, and certain granites and porphyries of Portugal, unrepresented.

Respecting slates, for the production of which this country is so remarkable, there were good illustrations, especially when regarded with reference to their manufactured state. There were also examples of slates from Canada. Foreign slates were little exhibited; the well-known Angers slates, France, were only represented by a few of the smaller size. There were, also, examples of slates from the United States, Sardinia, and Nassau.

Mr. Meinig, of Leadenhall Street, sent a splendid display of polishing, sharpening, and grind-stones, from all parts of the world—a most remarkable exhibition of its kind. Similar mineral products were to be found dispersed through various departments. Our own grind-stones were

not forgotten; and the well-known millstones of France and Belgium were well represented.

Of porcelain or china clay, the chief exhibition was that from Cornwall and Devon, which, with the addition of Cornish felspar, used in porcelain, was effective. There were some examples of porcelain clay from France; and in the Chinese collection, among the various materials employed in the manufacture of porcelain, were some illustrative specimens of similar clays. Many examples of pipe and other clays were to be found, as well as excellent illustrations of British fire-clays and bricks.

The important subject of mineral manures was not forgotten. The various substances, bones, teeth, coprolites, and concretions of phosphate of lime, from the tertiary series of Felixstow, near Ipswich, were shown, as were also the various bodies containing phosphate of lime from the British cretaceous series, of some localities. There was likewise an illustrative collection, pointing to the importance of mineral manures in the French department.

Of the mode of occurrence of gems there were some valuable illustrations, such as of the emeralds of New Granada and the turquoises of Arabia. If it may be permitted to include the precious stones generally (and a very fine collection of cut gems was shown in the Class I., British Department), looking at the exhibition of them generally, it may be probably regarded as the most remarkable ever assembled in a single building.

You will have gathered from the foregoing sketch, that, as regards mineral raw materials, mining and metallurgical processes, the Exhibition was of a very unequal

character. While there may have been many deficiencies, there were, at the same time, many important illustrations of this class. Regarding the subject as a whole, we have to repeat what has already been said of a particular branch of it, that the marvel is how, under all the conditions of collection, so much that was effective could have been accomplished. It is most desirable that the real character of this portion of the Exhibition, as, indeed, of all others, should be thoroughly understood, alike for the benefit of present knowledge as for future progress. Depreciation or exaggeration, the one by reaction usually producing the other, have to be alike avoided. By analysing the truth, we obtain results such as may really produce advance, and advance is your object. The Great Exhibition, brilliant as its course has been, is not the end; it is the means to the end. You do not intend to stand still, and look back upon its past splendour as a thing only of history; you propose to consider how far you can render it available for future public good. There is a movement, which cannot be mistaken, towards more general instruction connected with the industry of our country—a movement arising out of the late Exhibition. That this movement should be effective the utmost care will be needed; and as far as the Great Exhibition can instruct us, and assist the good cause, it is of the utmost importance that its brilliant and deserved success should not so far dazzle us that we pass unheeded many considerations of the most essential kind.

As regards the class with which we are now occupied, it is probable that which will be eventually found the least complete. It could scarcely be otherwise. I may be here

reminded that this is of the less importance, seeing that the State has already provided instruction as regards it, and, indeed, somewhat more. No doubt, the commencement of the School of Mines, lately opened at the Museum of Practical Geology, has been very successful, and that there is excellent promise for the future; but this present success and this promise for the future seem only to point out the more strongly that industrial instruction should be extended, and that, if carefully considered with reference to the wants and habits of our country, schools in aid of the various branches of industry, now receiving no educational assistance whatever, may be equally successful. Rest assured, there is no want of power in our land to produce the result desired; that power has but to be aroused, and to be skilfully adjusted, to become effective.

Viewed as suggestive, the deficiencies were valuable as pointing out the need of instruction generally respecting the true character of mineral raw materials, the means of extracting them, and the methods of rendering them available to man. It was not to be expected that the mass of the thousands daily visiting the Exhibition should be capable of forming a correct judgment on the subject, but it became an object of importance to endeavour to ascertain the proportion of those termed—from the kind of instruction they usually receive—the educated classes, who really appreciated such deficiencies. Beyond those whose business of life it was to take part in the commerce and industry connected with the subject, and who readily understood them, it was but too clear that little knowledge of the kind was diffused. This arose from no want of power

to grasp the subject, but simply that, under ordinary circumstances, this kind of knowledge had not been brought under consideration. It is one, nevertheless, of no slight value to many occupying the highest stations, who, if their mineral wealth were abstracted, would find their resources most materially deteriorated. It is no less important to numbers of persons daily speculating in mines, ignorant of all connected with them, except the traffic in shares. It is not a true inference, as has been sometimes drawn, that such want of knowledge is simply a private matter. It is a national loss, the amount of capital thoroughly wasted, and which, if rightly employed, would have been beneficial to the public, is enormous.

As has been seen, there were numerous and important illustrations of the subjects included in our class; many more especially valuable, as showing the applications of science to the means of rendering mineral substances useful. Some of these may not, indeed, have had claims to immediate novelty; but their juxtaposition was, nevertheless, highly suggestive of the direction in which the mind might be advantageously employed for further progress—an important point in exhibitions of this kind. Science is essential to progress in our department, and it is most cheering to find its union with practice daily becoming more thoroughly appreciated in this country, where hitherto we have not possessed the educational advantages, as regards instruction connected with industry, possessed by many other nations. We have had the advantage of seeing, during the late Exhibition, how eagerly our foreign brethren in industry seized upon all showing

the useful applications of science; how anxious they were to visit the localities whence illustrations of them were derived. Let us not be laggards in the same field; let us also utilize the Exhibition for progress, and not let its suggestions pass unheeded. It has been seen, that while we had much to teach, and many were the points connected with our mineral wealth which engaged the anxious attention of our visitors from other lands, we had also much to learn. Let us strive to learn as well as teach, and thus improve, for the advantage of all, the good fellowship established, by the influence of the Great Exhibition, among so many able men of various lands; and so that, in times to come, that Exhibition may be truthfully regarded as having been a real benefit to man.

December 2, 1851.

LECTURE III.

ON THE RAW MATERIALS FROM THE ANIMAL KINGDOM.

BY

RICHARD OWEN, F.R.S.

ROYAL ASIATIC SOCIETY LIBRARY OF THE BOMBAY BRANCH OF THE

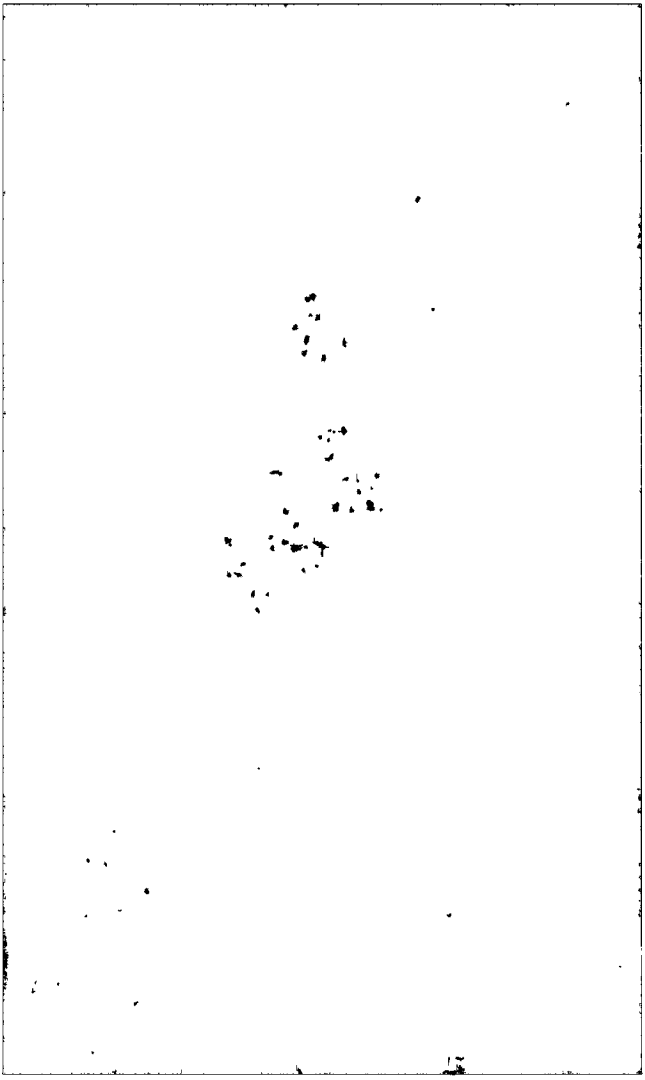

RICHARD OWEN, F.R.S.

ON THE

RAW MATERIALS FROM THE ANIMAL KINGDOM.

In coming before you this evening with some observations on the "Animal Substances used in Manufactures, displayed in the Great Exhibition of the Works of Industry of all Nations," I am actuated rather by a deference to the august source of the suggestion that originated the present series of lectures, and by the desire to comply with the request with which the Council of this Society have honoured me, than by any confidence in the worth of what I may have to say. My habitual studies have, truly, left me little leisure for their extension beyond the structure, developement, and purely scientific relations of those parts of animal bodies which mankind have converted to their outward use; and as for their applications to the arts and manufactures, and the various processes to which they are thereto subjected, I must confess myself herein a poor scholar merely, and a very recent one, owing such elementary information as I may possess to

opportunities afforded during the present year by the Great and happily-conceived Exhibition; from which every one, no matter what his social or intellectual grade, must have derived, if he availed himself of it at all, lasting instruction and benefit. No one could feel more conscious than myself of my want of all that special knowledge and experience which might have been looked for in a Juror for the Class (IV.) of "Vegetable and Animal Substances used in Manufactures, as Implements, or for Ornaments;" and I was aware that the only grounds on which my name could have suggested itself to the Council of the Great Exhibition, as that of one likely to serve them in that capacity, were my known devotion to the science of the organization of animals.* It was, however, urged, that such scientific knowledge would help in guiding to right conclusions on the nature and relative perfections of the raw materials assigned to the inspection of Jury IV.; and I need not say, that whatever aid it was thought I might contribute towards the successful carrying out a design, enlisting the warmest sympathies of every Englishman, was most heartily rendered, to the best of my ability, at the call of the Royal Commission. In the present concluding scene of that Act of the Great Industrial Drama in which I have been a humble performer, I must entreat your kind indulgence whilst I offer you, what alone I feel competent to do, some results, namely, of investigations into the nature, organization, and developement of the "Animal Substances chiefly used in Manu-

* "Official, Descriptive, and Illustrated Catalogue" (List of Jurors), vol. i. p. 45.

factures, as Implements or for Ornaments," being fully conscious that most of the members of this highly useful and distinguished Association know much better than I can pretend to do the art-and-manufacture relations of the subjects of the present discourse.

For the "raw materials" from the vegetable and animal kingdoms, adapted for manufactures, mankind owes more to the powers and operations of Nature than to the inventions and appliances of Art; and in the series of the various organic products of almost every climate which were exposed to view in the Exhibition of the Works of Industry of all Nations, the relative excellence of the objects to be compared might be deemed to be due rather to peculiarities of soil and sky than to the individual merits of the exhibitors. Almost every vegetable or animal substance may, however, be modified, and, in relation to its utility to man, improved, by a change of the circumstances under which it is naturally developed, such change or improvement being suggested by a patient study of the respective influence of those circumstances upon the useful properties of the substance. A further improvement may be effected by carefully defending the raw material during the progress of its developement from all external influences calculated to deteriorate or injuriously affect it. The value of every organic product in commerce is much influenced by the mode of its collection, or removal from the animal or plant when developed, and by the processes for separating the useless or less valuable parts, or heterogeneous matters, from the marketable constituent; and, in the sense in

which the term "raw material" was extended in its application to that section of the Exhibition assigned to Jury IV., great scope for both chemical and mechanical skill was afforded in the extraction and preparation of several of the vegetable and animal substances applied "in Manufactures, as Implements, or for Ornaments."

In the examination and comparison of the very numerous and diversified substances confided to their judgment, the Jury IV., over which I had the honour to preside, were guided and influenced by the consideration of the invention, ingenuity, skill, and industry manifested in the amelioration and perfection of these several substances, and by the degrees in which unfavourable conditions of soil and climate had been thereby overcome; and in deciding on individual merits, they were careful to take into account the natural facilities which favoured, and the natural difficulties which opposed, the realization of the desired qualities in the raw produce transmitted for exhibition. After a preliminary general survey of their field of operations had shown its vast extent and the great practical importance of the objects to be compared, the Jury, having regard also to the earnest desire expressed for expedition in their decisions, resolved themselves into two Committees, one for the Vegetable, the other for the Animal Kingdom; reviewing and testing from time to time in general meetings the evidence of the special examinations confided to those Committees.

The subjects selected for this evening's lecture, and on which I shall now proceed to speak, are the most valuable and important of those "raw materials" which fell under

the survey of the Committee for the "Animal Kingdom." And, first, of the animal substances used for textile products and clothing.

Wool.

The raw material of most importance and in most general use for the above purposes is wool. This is a peculiar modification of hair, characterized by fine transverse or oblique lines, from 2000 to 4000 in the extent of an inch, indicative of a minutely imbricated scaly surface, when viewed under the microscope, on which, and on its curved or twisted form, depends its remarkable felting property, and its consequent value in manufactures.

Most quadrupeds possess the woolly variety of hair as an under-clothing, but in a small proportion, and hidden by the smooth, exterior, coarser, and straighter kind of hair. In the wild sheep (*e. g.* the argali of Central Asia, *Ovis ammon,* and the mouflon or musmon of Sardinia and Corsica, *Ovis musimon,*) the woolly variety of hair is developed in excess; and in the domesticated races the fleece has been modified and improved, in various degrees, by crossing the breeds, by choice of climate and pasture, and by careful attention and defence during its growth, until not only has the original coarse character of the product disappeared, but qualities of wool of different kinds and of different degrees of superiority have been obtained, generally divisible into two classes, one better adapted for "carding," the other for "combing," and both available for a great variety of useful and elegant textile fabrics.

In judging of these qualities in the wools exhibited, the Jury tested the fineness and elasticity of the fibre, the degrees of imbrication of the scaled surface of the fibre as shown by the microscope, the quantity of fibre developed in a given space of the fleece, the comparative freedom of the fleece from extraneous matters, and the skill and care employed in preparatory processes; such, for example, as that termed "scouring" the fleece, upon which depends its liability or otherwise to mat at the bottom of the staple.

Probably a more extensive, varied, and instructive collection of wools was never brought together under one roof for inspection and comparison than that which was contributed to the Great Exhibition; and it exemplified, in a remarkable degree, the extent to which pastoral life—commenced, according to oldest records, in Central Asia, the habitat of the argali—has since been spread over the globe. From the provinces of Chinese Tartary, from Thibet, and India, in the East, to the lately redeemed tracts of the United States in the far West; from Iceland and Scandinavia, in the North, to the Cape of Good Hope, Australia, and Tasmania, in the South, specimens of the staple of the flocks there, and in almost every intermediate latitude and longitude, preserved and multiplied under the fostering and modifying influence of civilized man, had been transmitted for inspection and comparison.

If the test of the value of a domestic animal be the numbers on the preservation of which human care is bestowed, and on the extent of the habitable globe over which mankind has diffused the species, then the sheep

takes the first rank. With regard to an animal so essentially related to the welfare of mankind, every fact in its natural history is of special interest, and we are particularly concerned in the endeavour to trace the origin of the domesticated variety to which we owe so much.

The recent progress of palæontology, or the science of fossil organic remains—remarkable for its unprecedented rapidity—adds a new element to the elucidation of this question, which was so ably discussed by Buffon, and the naturalists of the last century. At present, however, the evidence which palæontology yields is of the negative kind. No unequivocal fossil remains of the sheep have yet been found in the bone-caves, the drift, or the more tranquil stratified newer pleiocene deposits, so associated with the fossil bones of oxen, wild boar, wolves, foxes, otters, beavers, &c., as to indicate the coevality of the sheep with those species, or in such an altered state as to indicate them to have been of equal antiquity. I have had my attention particularly directed to this point in collecting evidence for a "History of our British Fossil Mammalia." Wherever the truly characteristic parts, viz. the bony cores of the horns, have been found associated with jaws, teeth, and other parts of the skeleton of a ruminant, corresponding in size and other characters with those of the goat and sheep in the formations of the newer pleiocene period, such supports of the horns have proved to be those of the goat.* No fossil horn-core of

* A characteristic fossil of this kind found associated with remains of the mammoth and leptorhine rhinoceros, in the newer fresh-water pleio-

a sheep has yet been anywhere discovered: and so far as this negative evidence goes, we may infer that the sheep is not geologically more ancient than man; that it is not a native of Europe; but has been introduced by the tribes who carried hither the germs of civilization in their migrations westward from Asia.

Natural history, as yet, possesses no facts or principle adequate to the satisfactory solution of the question, whether the domesticated sheep—the *Ovis aries* of Linnæus—was created as such in special relation to the exigencies of man; or whether it was the result of man's interference with the habits and wild mode of life of the argali (*Ovis ammon* of Linnæus), or other untamed and unsubdued species of sheep. Analogy would point to the latter hypothesis as the more probable one. Domesticated varieties of animals have been established from wild originals for the behoof of mankind, within a comparatively recent period in his history; of which the turkey, introduced and diffused over Europe and Asia since the discovery of America, is an example. Permanent varieties of the *Ovis aries* itself have been instituted by the art and interference of man, of which I shall presently have to recount the chief circumstances of a very recent and remarkable instance. The most ancient records of our race, both sacred and profane, tell us of the sheep as already an animal domesticated for the food and clothing of man; and it is a significant fact, that both the Scythians of the

cene of Walton, in Essex, is figured in my "History of British Fossil Mammalia," p. 489, cut 204.

elevated plains of Inner Asia,—who, according to Herodotus, obtained felt,* and, according to Strabo,† food from their flocks—and the patriarchal Hebrew shepherds of the plains of Mesopotamia—the earliest instances of pastoral life—dwelt in that part of the earth where the wild argali (*Ovis ammon*) still exists in greatest numbers.

The ancient Hebrews were wholly an agricultural and pastoral people. Their pastures are described, in the 65th Psalm, as being "clothed with flocks." The religious metaphors of the Bible are chiefly derived from pastoral life, and in no part more touchingly than in the sacred poems ascribed to the Royal Psalmist:—"The Lord is my shepherd. I shall not want. He maketh me to lie down in green pastures; he leadeth me beside the still waters. Yea, though I walk through the valley of the shadow of death, I will fear no evil; for thou art with me; thy crook and thy staff, they comfort me." (Ps. xxiii. 1, 2, 4.) And again, how beautiful a pastoral picture is pourtrayed in the following few and simple words: "He shall feed his flock like a shepherd; he shall gather the lambs with his arm, and carry them in his bosom, and shall gently lead those that are with young." (Isa. xl. 11.) It is not, however, from the records of a people so exclusive as the Jews that we can trace the

* Herodotus, iv. 73, "They live under trees, covering the tree in winter with strong and thick undyed felt, and removing the felt in summer."

† "They do not till the ground, but derive their sustenance from sheep and fish, after the manner of the nomadic Scythians."—STRABO, xi. cap. viii. p. 486. Both cited by Mr. Yates in his classical work, "Textrinum Antiquorum."

course of the diffusion of domesticated flocks from the Asiatic centre where history points to the beginning of pastoral life. The classical authors of Greece and Rome, however, afford sufficient indication of the channels by which this element of civilization was diffused. We learn from Strabo, that sheep-breeding had extended to Northern Africa; and that, in his time, the dry and hot climate of Æthiopia exercised the same influence on the growth of wool as at the present day: "The Æthiopian sheep," he says, "were small, and instead of being woolly, were hairy like goats."* Of the numbers of the domesticated sheep in Northern Africa at the time of Pindar we may form an idea from the epithet "πολύμηλος," — "abounding in flocks," applied by that poet† to distinguish Lybia.

It appears, by quotations from Hipponax — a poet of Ephesus, who flourished about 540 years before Christ, and who alludes to the woollen fabrics of the Coraxi, who occupied part of modern Circassia — as well as from contemporary reference to the commerce of Miletus, at that period the greatest commercial city next to Tyre and Carthage, that the progress of sheep-breeding towards the north-west was across the Euxine Sea, and the straits connected with it, into Europe. Thrace is called by Homer "the mother of flocks;" ‡ and this is the earliest record of the domestic sheep in Europe. From Thrace we trace them to Thessaly, and thence to Greece, where they were so generally and successfully reared and tended,

* Cap. ii. sec. 1. 3, cited in "Textr. Ant.," p. 94.

† Pyth. ix. 11, cited in ibid., p. 25.

‡ Iliad, A. 222.

that "Arcadia" became the scene of all that the poets sing of the beautiful in pastoral life. Here the god Pan was feigned to be born — Pan the god of Arcadia; and to trace his worship from Greece to the colonies settled in Italy and Spain is to follow the progress of the diffusion of the domesticated flocks and the pastoral people over whom Pan especially presided.

From Spain and Italy the breeding of sheep extended into Germany and Gaul; and Cæsar found abundant cattle (*pecoris magnus numerus*), which may be inferred to include sheep, amongst the aborigines of Cantium or Kent, whom he describes as being "the most advanced in civilization of all the ancient Britons." I shall here quit the history of the diffusion of the domestic sheep, with the remark that some of those procedures, which are now most influential in improving the staple of the fleece, were practised in ancient times. Varro* speaks of the custom of the Athenian shepherds of covering their sheep with skins, in order to improve the fleece; and the Cynic Diogenes, in reference to a similar practice amongst the shepherds of Megaris, whose children were allowed to run about naked, says, "he would rather be the ram, than the son, of a Megarensian."†

The continuance of these arts of ancient pastoral life, combined with suitable climate and locality, and the exercise of skill and tact in crossing and breeding from the best varieties of the domesticated sheep, have combined to produce the fine qualities of the staple, which were so

* De Re Rusticâ, ii. 2. ("Textr. Ant.," p. 40.)

† Diog. Laert. vi. 41. (Ib. p. 42.)

remarkably illustrated in the specimens exhibited in the Crystal Palace.

After the comparison of the wools exhibited by the growers of different nations, our Jury were unanimous in making the first mention of those transmitted from Germany as being pre-eminent in the qualities of highest value.

Under "German Wools" were included those from Austria and Austrian Silesia, Hungary, Prussia, Saxony, and Polish Silesia. In Austria, the Jury made first mention of the specimens exhibited under No. 90, by Messrs. Figdor and Sons. The fleeces exhibited by this firm presented in a high degree the desired qualities of substance and trueness in the staple, due to the equality of size, and to the fineness and elasticity of the component fibres, the spiral curves of which were close and regular, and were immediately resumed after being obliterated by stretching the fibre, the length of which was also considerable for wool of this "felting" quality, the most valuable for the finest descriptions of cloth.

Under No. 92 Count H. Larisch Moennich exhibited the product of a fine and well-known flock, from Silesia, by four fleeces, which presented similar excellent qualities to those of No. 90.

The fine and high-bred fleeces of a pure stock merino, from Silesia, exhibited under No. 91 by Count Anton von Mittrowski, showed the valuable qualities of fineness and elasticity of fibre in an eminent degree.

No. 89, sent by Count Joseph Hunyada von Ketheley, was a fleece from a flock in Hungary, an unwashed spe-

cimen, but of a very fine quality of fibre; it was a little inferior to the best Silesian examples only in being somewhat thinner or poorer in substance. The fine imbrication and elastic properties of the fibre were, however, remarkably characteristic of this fleece.

From the difficulty of arriving at a correct judgment of the degrees of individual merit, especially from samples giving an uncertain indication of the average value of the produce of the flocks, the Jury, whilst awarding the prize medal to the best exhibitors, came to the conclusion of testifying their sense of the peculiar value and excellence of the felting or carding wools, adapted to the manufacture of the finest kinds of cloth, which were exhibited in the Austrian department, by recommending the transmission of a Council medal to the Government of that empire.

In the Zollverein, the fleeces transmitted by E. Lübbert from Zweybrodt, near Breslau, were very remarkable for those qualities which, like the Austrian Silesian wools, adapt them for the fabrication of the finest cloths. The merino fleeces of two-year-old ewes, from Bromberg, exhibited by Legations-Rath Kuepfer, were characterized by the fineness and regularity of the staple, and favourably illustrated the advance of the improvement of wool in the Prussian districts of the Middle Vistula. I must also mention the specimens exhibited under Nos. 45 and 46 by the Oberburggraf von Brünneck, viz. the fleeces of a ram and one ewe from a merino flock at Bellschwitz, and the specimens of wool indiscriminately taken from a merino flock at Rosenberg; for these, though rather inferior in

quality to the finest Silesian wools, manifested a fineness, softness, and elasticity of fibre, and a regularity of staple, which in the opinion of the Jury merited an award to the exhibitor of the prize medal. The Bellschwitz flock was procured by the Oberburggraf in Spain in 1814, and afterwards improved by additions of the finest Saxon and Silesian races in 1820 and 1824.

In America, the wool transmitted by Mr. J. H. Ewing, from Washington, Pennsylvania, was remarkable for the good substance of the fleece, as well as for the quality of the fibre, and the Jury awarded to him the prize medal. One of the able Experts, who rendered valuable aid to the Jury, was of opinion that "the wools shown by America most approximated to the character of the German wools."

In Russia, the specimens of wool from Livonia exhibited by N. N. Schloss-Wikaten, appeared to be derived from a flock of Silesian origin, and exhibited all those characters of the fibre which adapt it for good clothing purposes.

The wool from the merino sheep from Spain, for which that country was once so famous, showed all those characters which distinguished it a century ago; but not the advance and improvement made by the sheep-breeders who have since introduced the same variety into suitable localities in Saxony, Prussia, Austria, Hungary, and Austro-Silesia.

The best examples of Spanish wool were exhibited under No. 230, by Don Justo Hernandez. Of black and white wool from Salamanca, four samples were transmitted by this exhibitor:—1. Unwashed wool for clothing purposes; 2. Unwashed wool for worsted; 3. Wool washed

before shearing, in the Saxon manner; 4. Wool sheared in February 1851. Don Hernandez had introduced into Spain the custom of clothing the sheep from the beginning of December to the end of May; and amongst the specimens transmitted to the Exhibition, was a fleece which had been so defended, and one that had been exposed to the direct influence of the atmospheric agencies. The difference in the quality was remarkable, and spoke decidedly in favour of the temporary protection of the fleece.

In France, the specimens of wool selected as meriting the reward of the prize medal, were those exhibited under No. 1249, by Le Général Girod de l'Ain. The fleeces of merino wool, from this exhibitor's flock at Nuz, although of a thin staple, and apparently not full grown, manifested the qualities adapting it for the finer descriptions of cloth in an excellent degree. No. 1080, from the "National Sheep-fold of Rambouillet," showed similar qualities in four fleeces of the true merinos. No. 1312, E. Lefevre: the specimens of wool in tufts transmitted by this exhibitor from Gevrolles (Côte d'Or) were long in the staple and very sound, forming a very superior description of combing wool. No. 354, F. Richer: the two fleeces of rams, of pure merino breed, two years old, transmitted from Gouvix, Calvados, exhibited praiseworthy care and skill in the management of the flocks.

Amongst the series of wools shown in the French department were specimens characterized by a well-skilled English expert as "a wool of singular and peculiar properties; the hair glossy and silky, similar to mohair,

retaining at the same time certain properties of the merino breed." This wool was exhibited under No. 245, by J. L. Graux, of the farm of Mauchamp, Commune de Juvincourt (Aisne), as the produce of a peculiar variety of the merino breed of sheep.

The Jury entered into an inquiry, not only into the commercial value and application, but into the particulars of the production of this new kind of wool, and found it to be one of the very few instances in which the origination of a distinct variety of a domestic quadruped could be satisfactorily traced, with all the circumstances attending its developement well authenticated. The following is a brief statement of this interesting case.

In the year 1828, one of the ewes of the flock of merinos in the farm of Mauchamp produced a male lamb, which, as it grew up, became remarkable for the long, smooth, straight, and silky character of the fibre of the wool, and for the smoothness of its horns: it was of small size, and presented certain defects in its conformation, which have disappeared in its descendants. In 1829 M. Graux employed this ram with a view to obtain other rams having the same quality of wool. The produce of 1830 included only one ram and one ewe having the silky quality of the wool; that of 1831 produced four rams and one ewe with the fleece of that quality; in the year 1833 the rams with the silky variety of wool were sufficiently numerous of themselves to serve the whole flock. In each subsequent year the lambs have been of the two kinds; one preserving the characters of the ancient race; with the curled, elastic wool, only a little longer and finer than in

the ordinary merinos; the other resembling the rams of the new breed, some of which retained the large head, long neck, narrow chest, and long flanks of the abnormal progenitor, whilst others combined the ordinary and better formed body with the fine silky wool. M. Graux, profiting by this partial resumption of the normal type of the merino in certain of the descendants of the mal-formed original variety, at length succeeded, by a judicious system of crossing and interbreeding, in obtaining a flock combining the long fine silky fleece with a smaller head, shorter neck, broader flanks, and more capacious chest. Of this breed the flocks have become sufficiently numerous to enable the proprietor to sell examples of the breed for exportation. The crossing of the Mauchamp variety with the ordinary merino has also produced a valuable quality of wool, known in France as the "Mauchamp merino." The fine, silky wool of the pure Mauchamp breed is remarkable for its qualities as combining wool, owing to the strength as well as the length and fineness of the fibre. It is found of great value by the manufacturers of Cashmere shawls, being second only to the true Cashmere fleece in the fine flexible delicacy of the fabric, and of particular utility when combined with the Cashmere wool, in imparting to the manufacture qualities of strength and consistence in which the pure Cashmere is deficient.

Although the quantity of the wool yielded by the Mauchamp variety is less than in the ordinary merinos, the higher price which it obtains in the French market (25 per cent above the best merino wools), and the present value of the breed, have fully compensated M. Graux for the pains

and care which he has manifested in the establishment of the variety. Our Jury, therefore, taking into consideration the quality of invention which had been superadded to the skill and industry requisite for obtaining the finer qualities of wool under any circumstances, in the developement of the new variety of sheep yielding the specimens exhibited in No. 215, recommended that the Council medal should be awarded to M. J. L. Graux.

The comparatively moist climate of England is unfavourable to the developement of the highest qualities of wool. We are essentially a practical people, and it does not pay to give the sheep the extensive range, or allow them the length of life, which are amongst the conditions to be added to climate for the acquisition of the finest fleece. The interminable plains and mountain-ranges of Australia and Tasmania, where the flocks graze under the most favourable of skies, serve to produce for us the wools required for our manufacturers cheaper than they could be developed at home. Our business is to breed sheep for mutton, not for wool: to improve the stocks which in the shortest time put the most meat on the smallest bones. The fleece must always, therefore, be a secondary object with a good farmer. Nevertheless, very respectable samples of wool were exhibited in the English department of the Great Exhibition.

The samples of wool transmitted from Chichester by Mr. C. Dorrien gave evidence of a very high-bred flock, and manifested qualities of fibre for which the Jury awarded the prize medal.

The specimens of wool from the South Down wool,

transmitted by Mr. J. G. Rebow, also presented qualities of such excellence as to call for the award of the prize medal.

The fleeces of Cheviot wool, grown at an elevation of 2600 feet above the level of the sea, exhibited by Mr. Henderson, of Wooler, Northumberland, were remarkable for the fine silky quality of the fibre, which is well adapted for the blanket manufactory.

Perhaps many who are now present may recollect an object of curiosity which was shown in the south gallery of the English department. It was a South Down ewe, stuffed, seven years old, which had never been shorn. The weight of the accumulated annual fleeces was 36lbs. This specimen was exhibited by Mr. J. Moore, of Littlecott Farm, Pewsey, Wilts.

In the department of Australia the case containing 132 specimens of merino wool, contributed by Lieut.-Col. E. Macarthur, exhibited very favourable examples of the condition of the fleeces of that valuable variety of the sheep in New South Wales. The Jury regretted that the quantities transmitted were too small to afford the requisite means of judging of the average qualities of the flocks; but, taking into consideration the important services rendered by Lieut.-Col. Macarthur to the colony of Australia by his persevering and successful endeavours to develope a source of wealth from the merino breed of sheep, they awarded to him the prize medal.

The first importation of wool from New South Wales into England, in 1807, was 245 lbs. In the year 1848 the quantity from New South Wales alone amounted to

23,000,000 lbs., valued at more than 1,200,000*l.* sterling.*

In Russia, good examples of fine unwashed Cashmere goats' hair were exhibited by J. Abramoff, of Ekaterinoslaff, and L. K. Narishkin, of Saratoff, district of Balasheffsk.

In India, specimens of the wool of the sheep, the lamb, and the camel, were exhibited from Cutch, Sindh, and Assam. Goats' hair, or down, of Thibetian, Persian, and Hindostanee breeds, was also transmitted, together with a fine silky kind of down from the "Tsos" antelope.

The specimens of wool, or down, the production of the Cashmere goats kept by his Royal Highness Prince Albert at Windsor, and exhibited by his Royal Highness, were interesting examples of an additional staple new to England, and gave encouragement by their quality to the repetition of similar efforts to multiply and preserve that remarkable variety of the genus *Capra*. This staple includes, besides the closer and finer hairs answering to the wool of sheep and the fur of other quadrupeds, a coarser or stronger kind of white hairs. Both kinds are of value in manufactures—the stronger hairs, which require to be picked out prior to attempting to manufacture the finer portions, being afterwards used in the fabrication of coarse woollen cloths. This example of European Cashmere wool would have received a medal from Jury IV. had not one already been awarded to it by the Jury of Class XII.

* "Official Catalogue," vol. ii. p. 989.

Hair and Bristles.

Of the specimens of hair and bristles, a brief notice will suffice. The best developed and most valuable examples of these productions were exhibited in the Russian department, in which the Jury selected those shown under No. 340, by Kondriaozof and Jadenofsky, for the award of the prize medal, merited by the superior qualities of the horse-hair exhibited by them under that number. In the sample of white hair from the tail, the hairs were forty inches in length, and of the first quality for evenness, elasticity, and shining surface. In the sample of black tails, the hairs were forty-two inches in length. Fine specimens of white hair from the mane, of from twenty-eight to thirty inches in length, both transparent and opaque, and good samples of horse-hair for furniture, both twisted and untwisted, black, grey, and white, were also shown by the above firm.

Of the sample of bristles exhibited in the Russian department, the Jury selected No. 135, sent by MM. Semenoff and Faleyeff, as deserving, from the superiority of the combined qualities of strength, elasticity, and fineness of surface, the prize medal. These qualities were particularly shown in the packets of the sorted variety called "okàtka."

Camels' hair cloth, bristles from the wild boar and the elephant, and quills of the porcupine, were exhibited in the Indian department; and I must not omit to mention that in the department of Spain, Don D. Delgado, of Saragossa, exhibited some interesting examples of the hair of the rabbit and hare, shaved off the skin by a mechanical process. The vast numbers of those prolific rodents in

Spain afford a large supply of this kind of hair, which is put to the same uses as down.

Baleen.

I have next to speak of a substance which, though commonly called "whalebone," has nothing of the nature of bone in it, but is an albuminous tissue, nearly allied to hair and bristles, both in its chemical and vital properties and its mode of developement.

Of all the creatures which man has subdued for his advantage and use, that which surpasses every other animal in bulk, and which lives in an element unfitted for man's existence, might be supposed to be the last that he would have the audacity to attack or the power to overcome. The great whales that "tempest the ocean" are able, as many instances—and a very recent one—have shown, to stave in the bottom of a ship by a blow of their muzzle, and crack a boat by a nip of their jaws, as easily as we would a nut. "Si sua robora norint!"—if they did but know their strength, and how to use it, pursuit would be in vain, and whales would become the most dreaded instead of the most coveted of the denizens of the deep.

The cetaceans, which afford the whalebone, or, more properly, baleen-plates, are of a more timid nature than the great sperm-whales, which commonly cause the catastrophes alluded to; they have no teeth, but in their place they have substitutes in the form of horny plates, ending in a fringe of bristles—a peculiarity first pointed out by Aristotle.* Of these plates, properly called

* The passage occurs in the 12th chapter of the 3d book of the "Historia Animalium," and has given rise to much speculation and contro-

"baleen," the largest, which are of an inequilateral triangular form, are arranged in a single longitudinal series on each side of the upper jaw, situated pretty close to each other, depending vertically from the jaw, with their flat surfaces looking backwards and forwards, and their unattached margins outwards and inwards, the direction of their interspaces being nearly transverse to the axis of the skull. The smaller subsidiary plates are arranged in oblique series, internal to the marginal ones. The base of each plate is hollow, and is fixed upon a pulp developed from a vascular gum, which is attached to a broad and shallow depression occupying the whole of the palatal surface of the maxillary, and of the anterior part of the palatine bones. The base of each marginal plate is the smallest of the three sides of the triangle; it is unequally imbedded in a compact subelastic substance, which is so much deeper on the outer than on the inner side, as in the new-born whale to include more than one-half of the outer margin of the baleen-plate. The form of the baleen-clad roof of the mouth is that of a transverse arch or vault, against which the convex *dorsum* of the thick and large tongue is applied when the mouth is closed. Each plate sends off from its inner and oblique margin the fringe of moderately stiff but flexible hairs which projects into the mouth. The bases of the baleen-

versy: "Mysticetus etiam pilos in ore intus habet vice dentium, suillis setis similes." To a person looking into the mouth of a stranded whale, the concavity of the palate would appear to be beset with coarse hair. The species of *Balænoptera*, which frequents the Mediterranean, might have afforded to the Father of Zoology the subject of his comparison.

plates do not stand far apart from one another, but the anterior and posterior walls of the pulp-fissure are respectively confluent with the contiguous divisions of the bases of the adjoining plates at their thin and extreme margins, which by this confluence close the basal end of the interspace of the baleen-plates, which interspace is occupied more than half way down the plate by the cementing substance, or gum. Thin layers of horn in like manner connect the contiguous plates, and may be traced extending in parallel curves with the basal connecting layer across the cementing substance.

The baleen-pulp is situated in a cavity at the base of the plate, like the pulp of a tooth; whilst the external cementing material maintains, both with respect to this pulp, and to the portion of the baleen-plate which it develops, the same relations as the dental capsule bears to the tooth. According to these analogies, it must follow that only the central fibrous or tubular portion of the baleen-plate is formed, like the dentine, by the basal pulp, and that the base of the plate is not only fixed in its place by the cementing substance or capsule, but must also receive an accession of horny material from it.

The baleen-plates are smallest at the two extremities of the series; in the Southern whale (*Balæna Australis*) they rapidly increase in length to the thirtieth, then very gradually increase in length to about the one hundred and fortieth; from this they as gradually diminish to the one hundred and sixtieth plate, and thence rapidly slope away to the same small size as that with which the series commenced. Besides the external, and, as they may be termed,

the normal, plates, which have just been described, there are developed from the inner part of the palatal gum, in the *Balæna Australis,* a series of smaller fringed processes, progressively decreasing in size as they recede from the large external plates: the small plates clothe the middle region of the palate with a finer kind of hair, against which the surface of the tongue more immediately rests; they are also arranged in longitudinal series, which, however, are not parallel with the external one, but pass from the inner margin of that series in oblique lines inwards and backwards.

In the great Northern whale (*Balæna mysticetus*) the baleen-plates which succeed the large ones of the outer row, are more numerous, and are relatively longer and larger than in the *Balæna Australis.* Mr. Scoresby, who, in his account of the *Balæna mysticetus,* notices only the marginal plates, states that they are about two hundred in number on each side; the largest are from ten to fourteen feet, very rarely fifteen feet in length, and about a foot in breadth at their base. These plates are overlapped, and concealed by the under lip when the mouth is shut. In the *Balænopteræ,* or fin-backed whales, the baleen-processes internal to the marginal plates are fewer and smaller than in the true whales (*Balænæ*). The marginal plates are more numerous, exceeding three hundred on each side; they are broader in proportion to their length, and much smaller in proportion to the entire animal; they are also more bent in the direction transverse to their long axis.

Each plate of the baleen consists of a central, coarse,

80328

fibrous substance, and an exterior compact fibrous layer; but this reaches to a certain extent only, beyond which the central part projects in the form of the fringe of bristles. The chemical basis of baleen, according to the experienced Professor Brande, is albumen hardened by a small proportion of phosphate of lime.*

The final purpose of this singular armature of the upper jaw of the great whales is to secure the capture and retention of the small floating mollusks and crustaceans, which serve principally as their food. When the capacious mouth is opened, the water rushes in, and is strained through the fringed surface of the roof and sides, whilst the small animals are retained, bruised against the stiff bristled margins of the plates, and swallowed.

Baleen, or whalebone, from its tenacity, flexibility, elasticity, compactness, and lightness, is applied to a great variety of useful purposes. These were well exemplified in the collection exhibited under No. 103, by Mr. Henry Horan, which showed well-selected examples of whalebone plates from the Arctic whale (*Balæna mysticetus*), which yields the largest and best kind; from the Antarctic whale (*Balæna Australis*), which affords the second best kind; and from the great finner whale (*Balænoptera boops*), which affords the shortest and coarsest plates. With these examples of the raw material, Mr. Horan exhibited specimens of the raw material in various states of preparation, and numerous and ingenious applications of the prepared baleen, dyed of different colours, as, *e. g.*, for covering whip-

* For the microscopical characters, and other particulars of the baleen-plates, I must refer to my "Odontography," vol. i. p. 311.

handles, walking-sticks, and telescopes, and in the form of shavings for platting, like straws, in the construction of light hats and bonnets. An excellent and instructive series of preparations of baleen was also exhibited by Messrs. Westall, in which was more especially deserving notice the great variety of filamentary modifications of the whalebone material for numerous useful applications. Fine blades of whalebone from the *Balæna mysticetus* were exhibited in the United States department, under No. 531, by Mr. L. Goddard; and characteristic specimens of baleen-plates from the *Balæna Australis* had been transmitted by Mr. S. Moses from Van Diemen's Land.

Silk.

From a product of the most gigantic of animals I next proceed to notice one derived from a seemingly insignificant insect; yet it is the most costly of all raw materials for textile purposes,—I allude to silk. The most valuable kind of silk, and that which is the subject of the most extensive and pains-taking culture, is a secretion of the larva of a species of moth, indigenous to China, called, *par excellence*, the "silk-moth," and by entomologists *Bombyx mori*, from its native and favourite food, the leaves of the mulberry-tree.

Raw silk was imported into Europe long before the insect which produces it; but the antiquity of this raw material for the richest of our textile fabrics, by no means goes so far back as that of wool.

There is no certain reference to silk in any part of the Old Testament; the Hebrew word so rendered by King

James's translators (Ezekiel, xvi. 10, 13) may signify "fine flax;" and the learned Braunius concludes that silk was unknown to the Hebrews.*

The first definite mention of silk, with a notice of the creature producing it, is in the fifth book of the "Historia Animalium" of Aristotle. He indicates the island of Cos as the place where silk was woven into cloth; and he mentions (cap. xix. p. 850, Duval) four states of the insect which produces silk, under the terms σκώληξ, κάμπη, βομβύλιος, and νεκύδαλος; and these terms were understood by ancient writers after Aristotle, and no doubt correctly, to signify the states which modern entomologists would call the "young larva," the mature or "spinning larva," the "pupa" with its cocoon, and the "imago," or perfect insect.

In the New Testament, the use of silk is mentioned once unmistakeably (Revelations, xviii. 12).

The beautiful illustration of the Christian doctrine of the resurrection, which Basil, in the year of our Lord 370, drew from insect-metamorphoses, shows plainly that he had obtained his facts by a perusal of the famous zoological treatise of Aristotle:—"What have you to say, who disbelieve the assertion of the Apostle Paul concerning the change at the resurrection, when you see many of the inhabitants of the air changing their forms? Consider, for example, the account of the horned worm of India, which, having first changed into a caterpillar (*eruca* or

* De Vestitu Heb. Sacerdotum. My knowledge of the history of silk, as of wool, is chiefly derived from the "Textrinum Antiquorum" of Mr. Yates.

veruca), then in process of time becomes a cocoon (*bombylius* or *bombulio*), and does not continue even in this form, but assumes light and expanding wings. Ye women, who sit winding upon bobbins the produce of these animals—namely, the threads which these Seres send to you for the manufacture of fine garments—bear in mind the change of form in this creature, derive from it a clear conception of the resurrection, and discredit not that transformation which Paul announces to us all."*

Galen judiciously recommends silk threads for tying blood-vessels in surgical operations. The Roman poets and satirists made frequent mention of the luxurious silken clothes and attire, which were introduced at enormous expense during the period of the Empire. The silk so obtained was exported from Persia and India; but whether the *Bombyx mori* had been introduced into those countries at that period, or whether the raw material was obtained from China, is uncertain.

That silk was most abundant in China we learn from the oldest records of the singular people inhabiting that country, where from an early period, not only the mandarins, but all persons in easy circumstances, as well male as female, have worn silk, satin, or damask clothes. Even the uniforms of the soldiers were made then, as now, of this elsewhere considered so valuable material.

Of the wild original of the *Bombyx mori* there is the same incertitude as with regard to most domesticated

* "Textrinum Antiquorum," p. 215.

animals. The description which is given by M. Bertin in his work entitled "China, its Costumes, Arts, and Manufactures," seems to refer, as M. Latreille remarks, to the large *Phalæna atlas*. The wild silkworm is there said to curve a leaf into a kind of cup, and then to form a cocoon as large and nearly as hard as a hen's egg. These wild cocoons are so strong and so compact, that the insects have great difficulty in extricating themselves, and therefore remain enclosed from the end of the summer to the spring of the following year. These moths fly well. The domestic silk-moth, on the contrary, soon extricates itself, and has very feeble powers of flight. The wild silk-moth feeds indifferently on the ash, oak, and nagara; the *Bombyx mori*, as its name implies, feeds by choice, if not exclusively, on the leaves of the mulberry-tree.

I have now to speak of the introduction of the silkworm into Europe. According to Procopius, the *Bombyx mori* was first introduced into Europe in the reign of the Emperor Justinian, by two Nestorian monks who had travelled in Serinda,—which, whether it be India or China is uncertain,—and who succeeded in bringing a quantity of eggs,—secured (according to Photius) in a hollow cane,—to Constantinople, where they were hatched, and the larva fed and reared on the leaves of the black mulberry. The breeding of silkworms in Europe was confined for six centuries to the Greeks of the Lower Empire. In the twelfth century, the rearing of silkworms and the manufacture of silk were introduced by Roger, king of Sicily, into Palermo, whence this important branch of industry

was rapidly and successfully established in Italy, Spain, France, England, and subsequently in most of our colonies possessing a suitable climate.

Silk is a secretion of a pair of long glandular tubes, called "sericteria," which terminate in a prominent pore or spinnaret on the under lip. Before their termination they receive the secretion of a smaller gland, which serves to glue together the two fine filaments from the two "sericteria:" the apparently single thread being, in reality, double, and its quality being affected by the equality, or otherwise, of the secreting power of the "sericteria." The silkworm commences spinning when it is full grown, in some convenient spot affording points of attachment for the first formed thread, which is drawn from one part to the other until the body of the larva becomes loosely enclosed by the thread. The work is then continued from one thread to another, the silkworm moving its head and spinning in a zig-zag way, in all directions within reach, and shifting the body only to cover the part which was beneath it. The silken case so formed is called the "cocoon." During the period of spinning the cocoon, which usually takes five days for its completion, the silkworm decreases in size and length considerably; then casts its skin, becomes torpid, and assumes the form of the chrysalis.

The main object of the silkworm-breeder is to obtain cocoons of a large size, composed of a long, strong, very fine, even, and lustrous thread. These properties of the silk were found realized in the highest degree in the specimens transmitted from France, in which country the developement of the silkworm has for a long period exercised the

care and pains of many able silkworm-breeders, and of late years has been the object of systematic advancement by the Central Society of Sericiculture of France.

Much skill is exercised—I wish I could add without cruelty—in the art of killing the pupa and extracting it from the cocoon, and in preparing the latter for unwinding the delicate thread; heat being the agent of destruction in most of the processes, as it seems to have been in the remotest historic times in China. The method there employed, according to the old French missionaries in China, is as follows:—"The extremities of the cocoon are first cut off with a pair of scissors; they are then put in a canvass bag and immersed for an hour or more in a kettle of boiling lye, which dissolves the gum. When this is effected, they are taken from the kettle, are pressed to expel the lye, and are left till the next morning to dry. Whilst they are still moist the chrysalis is extracted from each cocoon, which is then turned inside out to make a sort of cowl. They are then easily wound into thread."

An accomplished author, who has celebrated the Great Exhibition in a work full of apt and striking allusions, beautifully apostrophizes the "wondrous worm, self-shrouded in thy silken tomb! Anon to emerge in brighter form, on higher life intent; but that stern man thy mystic transformation intercepts, with fatal fires, consuming tenant for the sepulchre."*

The results of all the most approved modes of rearing the silkworm and preparing the cocoons were exhibited,

* "The Lily and the Bee," by Samuel Warren, F.R.S., p. 92.

and might be studied with advantage, in the Crystal Palace.

The *Bombyx mori*, having been bred and reared under the special care and management of man during a long succession of ages, may be regarded as a domesticated species of insect; and it has become the subject, as in the higher domesticated races, of varieties, of which those called "Sina," "Syrie," and "Novi," in France, are examples.

The "Sina" variety of the silkworm is known and esteemed for the pure whiteness of its silk, the thread of which is fine, but weak, and not very lustrous. The "Syrie" variety is of large size, produces a cocoon abundant in silk, but the thread is rather coarse, and inclines to a greenish tint. The "Novi" race is small, but the cocoons are firm and well made, and the silk has a yellowish tint.

The specimens of cocoons and raw silk exhibited in the French department were numerous, and the degrees of excellence hardly to be discriminated in the finest examples selected for the award of the prize medal. With regard to the superior quality of these raw silks and cocoons, the Jury, by their recommendation of the award of the Council medal to the "Central Society of Sericiculture of France," desired to testify their admiration of the specimens exhibited by many members of that Society, and their appreciation of the important influence which it has exercised in the improvement of this beautiful and valuable product of the animal kingdom.

The Jury, however justly gave the honour of their

first notice to the beautiful specimens shown under No. 782, by Major Count de Bronno Bronski, exhibitor of unbleached silk and silk cocoons from the Château de St. Selves, near Bordeaux, Department de la Gironde. The cocoons were remarkable for their large size and regularity of form, and the silk for the unusual length of the thread, its natural pure white colour, its fineness and lustre. The circumstances under which this superior quality of silk was obtained are certified in a report by a Committee of the Agricultural Society of the Gironde, dated 28th April, 1847, to be as follows:—"In 1836 Major Bronski reared separately the eggs of the three varieties, 'Sina,' 'Syrie,' and 'Novi.' In 1837 he set apart the cocoons of the varieties 'Syrie' and 'Novi;' and on the exclusion of the imago, or perfect insect, he associated the males of the 'Novi' with the females of the 'Syrie;' and the hybrid ova were hatched at the ordinary period in 1838, the operations being repeated in 1839 and 1840. With regard to the race 'Sina,' M. Bronski, in 1837, separated the white from the black worms as soon as they were hatched. He then selected the largest and best-shaped cocoons, and made a special collection of the eggs from the moths excluded from those cocoons. This procedure was repeated in 1838 and 1839; but in 1840 he associated the males excluded from the large cocoons of the black worms with the females excluded from those of the white worms. In 1841 he associated the males of the 'Sina' race with the hybrid females obtained from the above-described crossings of 'Novi' and 'Syrie' breeds." By these and similar ex-

periments M. Bronski at length appears to have succeeded in obtaining a race of silkworms not subject to disease, producing large and equal-sized cocoons of a pure white colour, the silk of which was equal in all its length, strong and lustrous, and presenting an average length of thread of 1057 mètres.

Very beautiful examples of raw silk were also transmitted from different parts of Italy; and amongst the Italian silks the first mention was due to those exhibited in Tuscany, which showed well all the desirable qualities of the cocoons and thread. From these the Jury selected for the award of the prize medal No. 51, exhibited by Professor Savi, of Pisa, for the specimens of raw silk from silkworms fed upon leaves of the Philippine mulberry. In the department of Sardinia the Jury selected as deserving, for their excellent qualities, the prize medal, the silks exhibited by Messrs. H. Jacquet and Co., Messrs. Casissa and Sons, and Messrs. Rignon and Co.

Many of the silks exhibited in the department of Turkey were of a very fine character, exhibiting a good length of thread, with the qualities of fineness, strength, elasticity, and lustre. The Jury had great pleasure in awarding the prize medal to the School of Sericiculture at Broussa, as well as to some private exhibitors from Turkey.

Very fine examples of silk were shown in the Indian department, from which the Jury selected, as meriting the prize medal, the following:—D. Jardine, of Calcutta; Watson, of Surdah, Bengal; Mackenzie Brothers, of

Bengal; Jennings, of Commercolly; W. M'Nair, of Surdah, Bengal. Besides the silk from the ordinary silkworm (*Bombyx mori*), called in India *pat*, specimens of stronger and coarser kinds of silk were shown, from the *tussur*-moth (*Saturnia mylitta*), which feeds on the leaves of the *terminalia catappa* and *zizyphus jujuba*. The cloth woven from this silk is called "tussur-cloth," and is made at Midnapore. The moonga-silk is from the *Bombyx saturnia*, which feeds upon the same trees as the tussur. A piece of moonga-silk cloth, made in Assam, was exhibited. The *Phalæna cynthia* produces the *eri* silk. This species feeds upon the *ricinus communis*. The eri cloth is also woven at Assam. It is observed in India, that the *pat*, or true silk, from larvæ of the *Bombyx mori* fed on mulberry-trees grown in a strong clay soil, is generally better, the cocoons being larger and of better colour.

In the Chinese department the quality of the silk developed in the native country of the silkworm was worthily illustrated by the specimens exhibited by Yun-kee, of Shang-hae; to whom the Jury, therefore, adjudged the prize medal.

I must not quit the subject of silk without, finally, offering a tribute of praise to specimens of silk, from silkworms, reared on leaves of the white mulberry, at Godalming, Surrey, and exhibited by Mrs. Catherine Dodge, which, considering the unfavourable conditions of climate, showed qualities that deservedly elicited the award of Honourable Mention from our Jury.

Feathers and Down.

The most beautiful, the most complex, and the most highly-elaborated of all the coverings of animals, due to developements of the epidermal system, is the plumage of birds. Well might the eloquent Paley say,—"Every feather is a mechanical wonder; their disposition, all inclined backward, the down about the stem, the overlapping of their tips, their different configuration in different parts, not to mention the variety of their colours, constitute a vestment for the body, so beautiful, and so appropriate to the life which the animal has to lead, as that, I think, we should have had no conception of anything equally perfect, if we had never seen it, or can now imagine anything more so."

A feather consists of the "quill," the "shaft," and the "vane:" the vane consists of "barbs" and "barbules."

The *quill* is pierced by a lower and an upper orifice, and contains a series of light, dry, conical capsules, fitted one upon another, and united together by a central pedicle.

The *shaft* is slightly bent; the concave side is divided into two surfaces by a middle longitudinal line continued from the upper orifice of the quill, the convex side is smooth. Both sides are covered with a horny material, similar to that of the quill; and they inclose a peculiar white, soft, elastic substance, called the "pith."

The *barbs* are attached to the sides of the shaft, and consist of plates, arranged with their flat sides towards each other, and their margins in the direction of the

convex and concave sides of the feather; consequently they present considerable resistance to being bent out of their plane, although readily yielding to any force acting upon them in the direction of the line of the stem.

The *barbules* are given off from either side of the barbs, and are sometimes similarly barbed themselves, as may be seen in the barbules of the long feathers of the peacock's tail.

The barbules are commonly short and close-set, and curved in contrary directions, so that two adjoining series of barbules interlock together, and form the mechanism by which the barbs are compacted into the close and resisting vane of the quill, or "feather," properly so called. When the barbules are long and loose, they characterize that form of the feather which is properly called a "plume:" and such are the most valuable products of the plumage of birds in a commercial point of view; as, *e.g.* the plumes of the ostrich.

The lower barbs in every kind of feather are usually loose, forming the down, which is increased, in most birds, by what is called the "accessory plume." This is usually a small downy tuft, but varies in different species, and even in the feathers of different parts of the body of the same bird. The value of feathers, for bed-stuffing, depends upon the proportion of loose soft down that enters into their composition; and, as the "accessory plume" in the body-feathers of the swans, geese, and ducks, is almost as long as the feather from which it springs, hence arises the commercial value of the feathers of these aquatic birds.

In the developement of plumage, the first covering of

the bird is a temporary one, consisting of bundles of long, loosely-barbed filaments, which diverge from a small quill, and on their first appearance are enveloped in a thin sheath, which soon crumbles away after being exposed to the atmosphere.* These down-feathers are succeeded by the true feathers; to which they bear the same relation as wool does to hair, or the temporary to the permanent teeth. In most birds a certain proportion of the down-feathers is retained with the true feathers, and this proportion is usually greatest in the aquatic birds. It is most remarkable in the eider-duck (*Anas mollissima*); which may be compared with the sheep in regard to the quantity and quality of the softer and warmer kind of the epidermal covering. The down of the eider combines with its peculiar softness, fineness, and lightness, so great a degree of elasticity, that the quantity of this beautiful material which might be compressed and concealed between the two hands of a man will serve to stuff the coverlet of a bed.

All the varieties and modifications of the plumage of birds, serviceable in manufactures, or valued as ornaments, might be compared and studied with advantage in the Great Exhibition.

An instructive and comprehensive collection of feathers and down, in different states of preparation for bed-

* A good account of the mode of formation of feathers is given in a paper by M. F. Cuvier, entitled "Sur le développement des Plumes," in the "Mémoires du Muséum," tom. x. 10; or the article "Aves," in the "Cyclopedia of Anatomy," may be consulted.

stuffing, including English goose feathers, Irish goose and mixed feathers, Dantzig feathers, Russian goose feathers and mixed duck feathers, Hudson's Bay goose and duck feathers, Russian down and Greenland eider-down, were exhibited by Messrs. Heal and Son. Messrs. W. and C. Nightingale likewise exhibited an illustrative collection of feathers and down, showing the effects of their mode of purifying feathers by steam, without the use of sulphurous gas.

In the Russian department good specimens of white Bejetsk bed-feathers, grey feathers, and goose-down, were exhibited by J. Lapshin (No. 145), of Petersburg. Madame Ladighin, of Tamboff, transmitted a fine quality of down from the breast of the goose; together with articles made of goose-down.

In the Indian department were shown white and black ostrich plumes; but these had been imported from Aden. If the ostrich ever steps into Asia, it is only a little way into the Arabian side of the Isthmus of Suez: the *Struthio camelus* belongs to a peculiarly African genus of the great wingless birds. Tippets, victorines, and boas, made from the down of the young adjutant-crane (*Ciconia argala*) were exhibited from Commercolly; and also beautiful white feathers, of a smaller species of crane, from Arrahan. With regard to the application of quill-feathers as instruments for writing, I have nothing to say: the specimens illustrating that application having been placed, with other articles of stationery, under the inspection of another jury.

Horns and Antlers.

I next proceed to notice a class of raw materials from the animal kingdom extensively and variously exemplified in the Great Exhibition, most commonly used in the manufacture of implements, and known by the general name of "horns." In common parlance any hard body projecting from the head, terminating in a free, unopposed point, and serviceable as a weapon, is called a "horn:" such as the canine tusks which curve upwards and backwards through the skin of the head of the babyroussa, the larger incisive tusks of the elephant, and the long, straight, spirally-twisted tusk of the narwhal, which figures as the horn of the heraldic unicorn.

Even the weapons to which the term "horn" is properly or technically applied consist of very different substances, and belong to two organic systems as distinct from each other, as both are from the teeth. Thus the horns of deer consist of bone, and are processes of the frontal bone; those of the giraffe are independent bones, or "epiphyses," covered by hairy skin; those of oxen, sheep, and antelopes, are "apophyses" of the frontal bone, covered by the corium, and by a sheath of true horny material; those of the *Dicranoceros* (or prong-horned antelope) consist, at their base, of bony processes covered by hairy skin, and are covered by horny sheaths in the rest of their extent; they thus combine the characters of those of the giraffe and ordinary antelope, together with the expanded and branched form of the antlers of deer. Only the horns of the rhinoceros are composed

wholly of horny matter, and this is disposed in longitudinal fibres, so that the horn seems rather to consist of coarse bristles compactly matted together in the form of a more or less elongated, subcompressed cone.

The Indian and the Javanese rhinoceroses have a single horn; the Sumatran and African rhinoceroses have two horns; these, however, do not form a symmetrical pair, but are placed one behind the other. The anterior is supported upon a rough tract of the anchylosed nasal bones; it is always the longest, and this difference is considerable in the *Rh. simus*, in which it is straight and inclines forwards. The posterior horn, which is always the smallest in the two-horned rhinoceroses, is the one which is absent in the one-horned species. The horn in these is placed nearer the end of the nose in the old than in the young animal; and this change of position is effected by an order of growth analogous to that of the adductor muscle of the oyster, viz., by the addition of new fibres to the fore part of the horn in greater proportion than to the hind part, where they may be observed to be always in a state of decay.

The horns of the ruminants are always symmetrically disposed, and usually in a single pair; very rarely, as in the four-horned antelope (*Antilope quadricornis*), and in the great extinct Sivathere and Bramathere, in two pairs. In the ox, sheep, goat, and antelope tribes the horns are always supported by processes of the frontal bones, into which (save in some *Antilopidæ, e.g. Cervicapra, Dorcas,*) the frontal sinuses are continued. A thin vascular layer of the corium is co-extended with the periosteum of the

bone-process, or "core," and secretes the true horn, or "sheath." Horns of this type are never shed, and the *Ruminantia* that possess them are termed "cavicornia," or "hollow-horned."

Such horns are usually simple and conical, though they may be straight, curved, bent, hooked, or spirally twisted; only one existing species (*Antilope* (*dicranoceros*) *furcifer*) has them flattened, expanded, and bifurcate, like the great posterior horns of the extinct Sivatherium. Such compound horns are developed in both sexes in the *Bovidæ*, the *Ovidæ*, in all goats, and many antelopes, as, *e.g.* the caama (*bubalis*), the goral (*kemes*), the mar (*capricornis*), the chamois (*rupicapra*), the gazelle, and the oryx; but they are mostly larger in the males; they are not developed in the females of the *Saiga* and other species of *Antilope* proper, in the prong-horned antelope, the chiara (*tetraceros*), the madoqua (*Ant. montana*), the duyker-bok (*sylvicapra*), the bosch-bok (*tragelaphus*), and the strepsiceros (*calliope*).

Sometimes the horns are smooth and polished, sometimes longitudinally grooved; more commonly they are transversely ridged or "annulate." It is commonly believed that the horns of the ox acquire an additional ring every year after the third; but the addition of annuli is far from being annual in other species: many rings are gained in one year's growth of the ram's horns, and in those of the ring-horned antelope (*Ant. cervicapra*). The first formed horny sheath of the *Cavicornia* is commonly obtuse, thicker, and of a coarser texture, than that which is formed later; but it is equally extravascular, and

is merely displaced and shed piecemeal by the formation of new horn-fibres beneath it, like other layers of epidermal substance. The more compact horny matter developed at the period of maturity, and the use to which the horns are then more habitually and forcibly put, gives their points a sharpness and compactness very different from the first formed substance. In the young oryx it is bent backwards before it is cast off, but the bony core does not partake of this form.

The horns of deer, which consist wholly of bone, are properly called "antlers." They are covered by periosteum, and this by a soft vascular tegument technically termed the "velvet," during the progress of their growth. This once completed, the vessels shrink, the supply of blood is stopped, the integument of the antler dries and becomes detached, leaving the dense bony part as an insensible weapon. As this part loses its vitality, the absorbents proceed to sap its base, and at a certain season of the year the antlers are shed, after which the growth of another pair soon begins.

Thus the antlers of the deer tribe are shed and renewed annually, like the hair; and the antlers increase in size and in the number of the branches, until the animal has attained its full maturity and strength. The red deer, at this period, will develope, in the course of about ten weeks, a pair of antlers weighing about twenty-four pounds. But the great extinct Irish deer (*Megaceros Hibernicus*) must have thrown out of its circulating system in the course of a few months between seventy and eighty pounds weight of osseous substance.

The antlers of all the deer tribe have the same chemical and physical qualities as true bone; and the same chemical products, *e. g.* phosphorus and ammonia, may be obtained from them. The common term "hartshorn" indicates the former exclusive use of the antlers as the source from which ammonia was obtained. The density of the texture of the antler gives it value and utility for the purposes of cutlery, and for weapons and ornaments of various kinds.

Numerous fine and illustrative specimens of horns and antlers were transmitted to the Great Exhibition, amongst which the collection in the Indian department merits the first notice for the number and variety of the examples. There were shown the dense antlers of the *Cervus Aristotelis*; of the bara sinha (*Cervus Duvaucellii*); of the sámber (*Cervus hippelaphus*); of the kâher, or barking deer (*Cervus vaginalis*, Boddaert); of the axis (*Cervus maculatus*); of the mar (*Capricornis bubalina*); and of hog-deer (*Cervus porcinus*); there also might be seen noble specimens of the horns of the gour (*Bos cavifrons*), and of the great Arné buffalo (*Bos* (*bubalus*) *Arna*).

In Canada were shown fine examples of the palmated antlers of the great moose or elk (*Alces Americana*); and both Egypt and the Cape contributed specimens of the horns of the rhinoceros, the buffalo, and of various antelopes.

It did not appear that any of the specimens of horns exhibited improvements of size or texture, as the consequence of modifications in the food or habits of the species, superinduced to that end by the art of man. The func-

tions of the Jury, therefore, in judging between degrees of excellence as the consequence of human ingenuity and skill, found no exercise in regard to the present class of raw materials.

Ivory.

The same considerations necessarily limited the functions of our Jury in regard to the tusks of animals presenting the modification of dental substance to which the term "ivory" is applied. Fine ivory, distinguished by the decussating curved lines on the surfaces of transverse fractures or sections of the tusk, is peculiar to the African and Asiatic elephants, amongst existing quadrupeds, and the best is obtained from the wild individuals; domestication of the elephant, in India at least, having been attended usually by deterioration of the length and quality of the tusks.

The finest specimens of elephant's tusks sent to the Great Exhibition were a pair weighing 325 pounds, from the *Elephas Africanus*, obtained from an animal killed near the newly discovered Lake Ngami, in South Africa; each tusk measured eight feet six inches in length, and twenty-two inches in basal circumference. A single tusk, weighing 110 pounds, from the same locality, was associated with them. These specimens were exhibited by Mr. Joseph Cawood.

Messrs. Fauntleroy and Sons exhibited an instructive collection of elephants' tusks in No. 135. The largest of these was also from the African elephant, and weighed 139 pounds. Varieties of tusks were exhibited from the

Gold Coast, the Gaboon River, Zanzibar, the Cape of Good Hope, Angola, Alexandria, Ceylon, and the East Indies. Of the tusks which possess a dense texture, but have not the engine-turn markings of true ivory, Messrs. Fauntleroy exhibit those of the narwhal, the walrus, and the hippopotamus; and the Jury regarded this instructive collection as deserving Honourable Mention.

Fine tusks of the Ceylon variety of elephant were shown in the collection from that island; and several examples of the continental Asiatic kinds were exhibited in the Indian departments; amongst the tusks of the Siamese elephants was one which weighed 100 pounds, and showed a fine white compact kind of ivory.

Tortoise-shell.

Of the modifications of epidermal productions, commonly called tortoise-shell, almost every variety might be studied in the wonderful collection of the works of nature and of art which has made the present year ever memorable.

The substance called tortoise-shell consists of certain large horn-like epidermoid plates, which cover in an imbricated or overlapping manner the carapace, or back shell of the marine tortoises or turtles (*Chelone*). The species which afford the most valuable of these plates are the Karet tortoises, or imbricated turtles (*Chelone imbricata, Chelone Caretta*), from which are obtained five large plates from the middle of the carapace, and four large ones from each side; these plates, thirteen in number, are technically called "blades;" twenty-five smaller plates are obtained

from the margin of the carapace, which are called the "feet" or "noses," in commerce. The other plates collectively are called the "head" of the turtle.

Pearl, Nacre, Shell.

A still more beautiful and precious animal product is that which, in all ages, has been classed as an ornament amongst the jewels or precious stones,—I allude to Pearls.

These valuable substances are the result of an excretion in superimposed concentric laminæ of a peculiarly fine and dense nacreous substance, which consists of membrane and carbonate of lime. The finest quality of pearl is produced by the bivalve of the Indian Seas, called, *par excellence*, the "pearl oyster" (*Meleagrina margaritifera*), fine specimens of which were exhibited in the Indian and Ceylon collections. The finest pearls are found at Ceylon.

Pearls of an inferior description, formed in a fresh-water bivalve (*Unio margaritifera*), were exhibited under No. 15, Class I. by Mr. John Nelis, of Omagh, county Tyrone, from specimens obtained from the deepest parts of the river Strule, near Omagh. Similar pearls, also found in the *Unio margaritifera*, from the river Ythan, Aberdeenshire, were shown under No. 16, Class I., by Messrs. Corvie and Rae, of Ellon, Scotland. It is probable that the pearls from this source, collected by the ancient Britons, may have given rise to the statement by Tacitus, in his "Life of Agricola," of pearls "not very orient, but pale and wan," being among the indigenous products of Great Britain. Pearls, similar to those from

the *Unio margaritifera*, were exhibited under No. 41, Sweden and Norway, by Mr. Torstrup, from Christiana.

The smaller kind of pearl, called "seed-pearl," is obtained at Kurrachee, on the Bombay coast. They are of little value, except to those who esteem them as medicine, viz., the Persians and some of the Hakeems of India. The oysters producing "seed-pearls" are washed up by the surf-waves to high-water mark, and are left there as the tide falls. They are gathered by Coolies, employed for the occasion, put into boats, and landed at Keeamaree Point. There the shells are broken, and the pearls extracted, under the superintendence of the contractors, who now pay the Julpore Government 40,000 rupees per annum for the pearl-contract. Even the gleaners who come after them pay for the right of sifting the broken shells in search of any pearls that may remain.

Mother-of-Pearl, or Nacre.

In the Indian collection were shown most of the shells which yield the manufacturer the finest kind of nacre: these are the *Meleagrina margaritifera, Haliotis gigas, Haliotis iris,* and a large species of *Turbo,* which shells are known in commerce as flat-shells, ear-shells, green snail-shells, buffalo-shells, Bombay shells. The mother-of-pearl is the internal or nacreous layer of such shells. Dr. Carpenter has detected indications of a minute cellular structure in the nacreous laminæ of the *Haliotis,* which he has not observed in the nacre of bivalves. Fine specimens of some of these shells from Sincapore and Manilla, especially the great *Meleagrina* and *Haliotis,* were exhibited by

Messrs. Fauntleroy, under No. 135; and by Mr. Banks, under No. 287, Class XXII., in connexion with the manufacture of mother-of-pearl buttons.

Cameo-Shells, Corals.

Specimens of cameo-shells (*Cassis rufa*), species of *Cypræa*, and of shells used as ornaments by certain natives of India, with the rude but efficient instruments for cutting them, were shown in the Indian collection.

Shells adapted for cameo-cutting are dense, thick, and consist of three layers of differently-coloured shell-material. In the *Cassis rufa* each layer is composed of many very thin plates—in other words, is "laminated"—the laminæ being perpendicular to the plane of the main layer: each lamina consists of a series of elongated prismatic cells, adherent by their long sides. The laminæ of the outer and inner layers are parallel to the lines of growth, while those of the middle layer are at right angles to them. In the cowreys (*Cypræa*) there is an additional layer, which is a duplicature of the nacreous layer formed when the animal has attained its full growth.

Descending now to the lowest forms of animal life, and those that link the animal with the vegetable, I ought to speak of the nature and developement of those raw materials called "corals" and "sponges," which serve for various purposes of ornament and use. But the limits of an evening's discourse compel me to refer to the works on Zoology, in which their nature will be found fully elucidated. The Great Exhibition was rich in the various calcareous bases or skeletons of the ramified and rooted

marine zoophytes, which are sought after for different economic applications.

One of the finest examples of the red coral (*Corallium rubrum*) was exhibited by Messrs. Paravagna and Casella, under No. 84, Class XXXIII., in connexion with cameo-work and carving in coral. Specimens of red coral were also exhibited in the collection from Algiers. A fine collection of both corals and madrepores, including the black flexible coral (*Gorgonia*), was shown in the department of Bermuda.

Gelatines.

Such productions as coral, shell, and pearl, are naturally attractive by their intrinsic beauty or rarity. But the most refuse and uninviting, and seemingly most worthless parts of animal bodies, are turned to uses of the most unexpected kind by the inventive skill and science of man.

The raw materials chiefly used in manufactures derived from the gelatinous textures of animal bodies may be divided, as regards their commercial value and application, into two kinds:—

1st. The gelatines and glues, properly so called, derived from the dissolution of certain animal tissues, and especially from the waste residue of parts of animals which have served for food, or for the operations of tanning, or for the fabrication, as from bones, of articles in imitation of ivory, or from the waste particles in the carving of ivory itself.

2d. The cleansed and dried membranes of different

species of fish, more especially of the sturgeon family (*Acipenseridæ*), preserving a peculiar texture, on which their value in the refining of fermenting liquors more especially depends;—such membranes are called "isinglass."

The most remarkable progress in the economical extraction and preparation of pure gelatines and glues from the waste remnants of the skins, bones, tendons, ligaments, and other gelatinous tissues of animals, has been made in France, where the well-organized and admirably arranged establishments for the slaughter of cattle, sheep, and horses in large towns, give great and valuable facilities for the economical applications of all the waste parts of animal bodies. Among the beautiful productions of this industry, the specimens exhibited by its chief originator, M. L. F. Grenet, under No. 247, merited peculiar approbation. They included different kinds of gelatine in thin layers, adapted for the dressing of stuffs, and for gelatinous baths, in the clarification of wines which contain a sufficient quantity of tannin to precipitate the gelatine; pure and white gelatines cut into threads for the use of the confectioner; very thin white and transparent sheets called "papier glacé," or ice-paper, for copying drawings; and, finally, a quantity of objects of luxury or ornaments formed of dyed, silvered, or gilt gelatines, adapted to a variety of purposes, and to the fabrication of artificial or fancy flowers. M. Grenet, who was the first to fabricate on a large scale, out of various residues of animal bodies of little value, these beautiful and diversified products, many of which previously had been derived from the more

costly substance—isinglass, was deemed by the Jury to merit the award of the Council medal.

Many manufacturers in France have risen to great eminence in this line by following the processes of M. Grenet. H. Castelle, of Paris, exhibited (No. 107) a still more varied assortment of the modifications of gelatine, amongst which are particularly deserving of notice the very large sheets of transparent gelatine, colourless, white, of various well-defined colours, and embossed or stamped with elegant patterns.

Isinglass.

This raw material owes the greater part of its commercial value to its special organization, which permits its separation into extremely delicate fibres, capable of operating mechanically in the clarification of white wines and malt liquors. In order to obtain the best isinglass, care must be taken to choose the most suitable membranes of the proper species of fish, and to avoid altering their peculiar tissue in the process of drying and preparing them.

Under these two relations the raw products exhibited in the department of Russia held the first rank. MM. Marimanoff and Armakoona (No. 81) displayed specimens of the best quality of isinglass, consisting of the tissues of the air-bladders of the species of sturgeon called *Acipenser huso,* well cleaned, and removed and dried without the texture being affected. No. 116, transmitted by an anonymous Russian exhibitor, presented a variety of isinglass obtained from the intestinal membranes of the

sturgeon, in the form of elongated stripes, made into bundles. This substance, like the gelatines from the tendons, bones, and hides of cattle, serves well for different culinary purposes, and for the same uses in manufactures as fine gelatine from other sources.

Messrs. Simpson, Humphreys, and Vickers, exhibited a rich variety of specimens of isinglass in the different raw states in which it is imported, and in all the states of its preparation for the applications for which it is sold.

The greater part of the gelatinous products exhibited by the English manufacturers were prepared from isinglass, and chiefly applied to articles of food. The commercial qualities of isinglass are instructively shown in the collection exhibited under Nos. 117, 118, and 141. Some exhibitors, however, showed excellent glues and gelatines obtained from various residues of animal bodies, and destined for manufacturing purposes. M. Muller (No. 125A) transmitted a fine assortment of glues and gelatines, analogous to the products of M. Grenet. M. Dufaville (122) exhibited a beautiful sample of amber-coloured, transparent gelatine, in shreds, called "crystalline," from its glittering surface, and also good filaments of isinglass for culinary purposes.

Amongst the specimens from India there were different kinds of isinglass in the raw state from species of fishes distinct from those of Europe which commonly afford this substance. The principal of these were from a siluroid fish, the *Polynemus plebeius*, the dried air-bladders of which possess the fine fibrous tunic which imparts the clarifying qualities that render isinglass so valuable in the

manufacture of white wines and beers; and they also are well adapted for the fabrication of fine gelatines used in manufactures and confectionary.

Such, Sir, are some of the numerous and diversified kinds of products from the Animal Kingdom which I have selected for the remarks I have had the honour to submit to you this evening. To have attempted, in the briefest way, to treat of all of that class which were transmitted to the Great Exhibition, would have led me far beyond the bounds of a single discourse.

Whatever the animal kingdom can afford for our food or clothing, for our tools, weapons, or ornaments—whatever the lower creation can contribute to our wants, our comforts, our passions, or our pride, that we sternly exact and take at all cost to the producers. No creature is too bulky or formidable for man's destructive energies—none too minute and insignificant for his keen detection and skill of capture. It was ordained from the beginning that we should be the masters and subduers of all inferior animals. Let us remember, however, that we ourselves, like the creatures we slay, subjugate, and modify, are the results of the same Almighty creative will—temporary sojourners here, and co-tenants with the worm and the whale of one small planet. In the exercise, therefore, of those superior powers that have been intrusted to us, let us ever bear in mind that our responsibilities are heightened in proportion.

LECTURE IV.

CHEMICAL AND PHARMACEUTICAL PROCESSES AND PRODUCTS.

BY

JACOB BELL, Esq. M.P.

JACOB BELL, Esq. M.P.

ON

THE CHEMICAL AND PHARMACEUTICAL PROCESSES AND PRODUCTS.

The subject which engages our attention this evening is the probable influence of the Great Exhibition on the second class of objects, namely, "Chemical and Pharmaceutical Processes and Products." If these terms were to be taken in their extended sense, we might include more than half the classes into which the contents of the Exhibition have been divided, as many of these — and among them some of the most important and interesting — are indebted to the science of chemistry for the high position they occupy among the industrial arts. But the branches of industry to which I refer, having separate classes assigned to them, are foreign to our present subject, except in relation to the chemical processes connected with them.

We are restricted this evening chiefly to those objects which are usually designated as drugs and chemicals; which, however important they may be as a link in the

chain, are not particularly calculated to attract or interest the public generally. So much was this felt to be the case at the time that the scheme of the Great Exhibition was first proposed, that it was a disputed question whether such articles were suitable for admission into the building. It had, however, been determined by His Royal Highness Prince Albert and the Royal Commissioners that the Great Exhibition should contain illustrations in every branch of commercial industry; it was designed not merely to please the eye and attract the superficial observer, but to collect in one building specimens of every kind of product and manufacture from all parts of the world. This comprehensiveness in the undertaking was its most remarkable feature; and in proportion as the practical bearing of the Exhibition on each class became more generally understood, the early misgivings and prejudices were removed, and the disposition to co-operate increased.

There was still a question on which some difference of opinion prevailed, namely, whether the Exhibition should be confined to such objects as possessed the merit of originality, or unusual excellence or peculiarity in the manufacture, or whether it should comprise ordinary specimens of products and preparations? Among those who fully recognised the propriety of exhibiting rare chemicals, there were some who ridiculed the idea of transferring to the Exhibition the stock of a druggist or apothecary, with which every one in the profession is familiar, and which to those out of the profession would possess no attraction. This objection, however, was over-

ruled. It was considered that the Exhibition was addressed to the whole world, that objects in daily use in one country might be unknown in other countries, and that the building ought to contain a series as complete as possible of the products and preparations employed in each locality.

If all the objects exhibited had been unusually fine, and many of them such as are rarely met with, they would not have conveyed a correct idea of the actual state of commerce in the several classes, for which purpose it was necessary to include such a variety as to form a fair average. The principle, therefore, which was acted upon in reference to chemical and pharmaceutical productions was this: in addition to the specimens sent by individuals in competition with each other, specimens, consisting chiefly of raw materials and indigenous or imported products of the materia medica, were contributed by a number of druggists in their collective capacity, to illustrate the state of the drug-market in England, and for comparison with other specimens from foreign markets. From this arrangement it will be seen that two distinct objects were contemplated in this part of the Exhibition; first, the encouragement of improvements, by the stimulus of competition among individuals; and, secondly, the diffusion and extension of knowledge respecting the nature, the history, and in some cases the origin, of the various materials employed for chemical and pharmaceutical purposes.

The first of these influences is applicable to exhibitors in all classes. It is the principal and primary object of

exhibitions of this description to excite emulation among individuals, and thus to bring out improvements and discoveries for the benefit of the public at large. In order to appreciate the impulse thus given to industry, it is only necessary to refer to the enormous outlay at which many of the objects were produced, and the spirited manner in which the undertaking was carried out. It was obvious that those who enjoyed a high position in their several occupations were determined, if they exhibited at all, to maintain that position, and that others were equally determined, if possible, to eclipse those who had previously been in advance of them in public estimation. It was an honourable trial of skill, in which individual exertions were made subservient to collective advantage. Although it was at first supposed that chemistry and pharmacy afforded very little scope for a public competition of this kind, the result has shown that this was an erroneous impression. The large chemical manufacturers made the most magnificent display. Their enormous masses of crystals of tartaric and citric acid, the prussiates and chromates of potash, alum, sulphates of copper and iron, &c., stood forth as beacons to attract the eye to the spot where other chemicals less conspicuous, though no less important, were exhibited. Many of the large groups of crystals were remarkable for their fantastic and elegant forms, and gave evidence of a determination on the part of the manufacturers to prove that the ornamental as well as the useful comes within their province. Round these groups of crystals ladies frequently assembled, and speculated upon the introduction of some of the specimens as

drawing-room ornaments. If the tide of fashion should set in in that direction, an additional impetus will be given to industry among the manufacturing chemists.

Turning from these gigantic and prominent specimens, which serve to show the scale on which some of our chemical works are conducted, we have here some single crystals exhibited by Mr. Copney, which are interesting on account of the mathematical accuracy with which the normal form of the crystal is preserved. In the groups before mentioned the individual crystals so intersect and crowd upon one another that no individual crystal is perfect. To attain this latter object, a hot solution of the salt is prepared and set aside to cool: a hair or thread is suspended in the solution to favour the deposition of single crystals. A perfect crystal having been selected and detached from any others which may be adhering to it, is replaced in the mother liquor, to which from time to time a small portion of a concentrated solution of the salt is added to feed the growing crystal. If the solution be too strong groups of small crystals are formed, which must be removed. The crystal must be turned every day, so as to expose each phase of it in rotation to the same influence. This process of turning and feeding is continued regularly several months, or until the crystal has attained the size required. (Chrome, alum, sulphate of copper, sulphate of magnesia, &c. were on the table.) I may also advert to a series of valerianates exhibited by Mr. Barnes. These compounds of valerianic acid are interesting. Some of them are employed medicinally, others have not yet been introduced. In both these instances, and in

many others, the Exhibition has served as a stimulus to young men in their application to practical chemistry. The double salts of iron and some of the preparations exhibited by Messrs. Hemingway are very well prepared, and indicate the progress of pharmaceutical chemistry. I might give numerous examples of improved processes in pharmacy, but this would possess no general interest, and would be foreign to my present purpose, which is to refer to certain principles, and bring forward a few familiar examples by way of illustration. For the same reason I shall not attempt to give anything like a complete account of the choice chemical specimens and other interesting objects which the Exhibition contained: but I ought not to omit mentioning in general terms the very beautiful preparations of mercury, lead, zinc, tin, antimony, silver, potash, soda, and iodine; also the salts of morphia, strychnia, aconitina, vegetable extracts and juices, among the numerous chemical and pharmaceutical products exhibited by chemists whose names are well known as manufacturers of those articles.

The medicinal plants exhibited by Mr. Kent were so remarkably well preserved, that many of them possessed all the beauty of the living plant; and in all the specimens, the characteristic smell and other properties were unimpaired. Such a collection of dried medicinal plants was, I believe, never before exhibited. It is probable that Mr. Kent might be able to describe some practical improvements in the details of his process. The precautions usually adopted consist in employing a properly constructed drying chamber, carefully regulating the

temperature and the supply of air, and excluding the light.

The foreign collections contained many fine specimens, although the British collection was much more extensive and complete. It is, however, only fair to state, that some of the leading manufacturers in France and Germany did not exhibit, and that many of the foreign productions, although smaller, were in other respects quite equal to those in the British section. The series of chemicals from Messrs. Powers and Weightman, of Philadelphia, including picrotoxin, piperin, cubebin, menispermin, santonin, several salts of quinine, and other curious chemical products, deserves especial notice. In the German and Austrian collections were fine specimens of glacial phosphoric acid, phosphorus, acetic acid, bromine, prussiate of potash, ultramarine, and many other products. From Italy we had phloridzine, santonine, ergotine, quinine, &c. Phloridzine is a bitter principle, obtained from the bark of the root of the pear-tree. It is not used in England, but is in high repute in Italy as a substitute for quinine, to which it is said in some cases to be superior. It could easily be prepared in this country if a demand should arise.

In the department of animal chemistry, some rare organic products were exhibited by Mr. Bullock—kreatine, kreatinine, urea, hippuric acid, &c. The processes for obtaining animal products of this kind require some skill and experience. The specimens were very fine. We also had Mr. Borden's meat-biscuit—a convenient form of animal food in a concentrated and portable state.

The illustrations hitherto given refer chiefly to chemical and pharmaceutical products relating to medicine. The same stimulus operated with equal effect in promoting competition in the preparation of chemicals used in the arts and manufactures. For example, ultramarine, a pigment, of which the only source was formerly the lapis lazuli, an expensive mineral, is now artificially prepared to a great extent. In 1814, Vauquelin accidentally discovered this product in pulling down a furnace in a soda factory; and from his examination of the substance he identified it as ultramarine, and concluded that it might be artificially prepared. A reward was offered in France for the process. The composition of the ultramarine from lapis lazuli was known by analysis to be sulphur, silica, soda, and alumina. Yet for a long time it was suspected that these were not the only constituents. Traces of iron and carbonate of lime had been found in some specimens of lapis lazuli; but Messrs. Clement and Desormes ascertained that these were accidental impurities. It had long been known that elements, when chemically combined, often produced compounds totally different in character from the elements; yet the chemists engaged in the investigation anxiously sought for some colouring principle which seemed to have eluded their grasp. M. Guinet solved the mystery in 1828, by a synthetical experiment. He combined the four constituents, and obtained ultramarine; Robiquet, Gmelin, Persoz, and other chemists, afterwards discovered the process. The consequence of the discovery has been, that ultramarine, instead of being a rare luxury, used only by the most eminent artists for

especial purposes, is introduced into almost every branch of art and manufacture, in which a bright blue pigment is required; and it may now be obtained at a price ranging from 10*s.* to 1*s.* 3*d.* a pound. In the Great Exhibition, the specimens of ultramarine, French, German, and English, held so prominent a place, that the Jury considered it requisite to obtain the assistance of gentlemen who had devoted especial attention to this particular subject; and it was no easy task to decide as to the comparative merits of the very numerous samples which the competition had brought into the field.

If time permitted, I might refer to Longmaid's process for treating ores and minerals; De Larderel's process for obtaining boracic acid; and Prat and Agard's improvements in the manufacture of salt; which, with M. Guinet's ultramarine process, constituted the four discoveries or inventions for which the Council medal was awarded. The other three processes do not illustrate the influence of the Exhibition in promoting competition, but show the advantage of chemical discoveries in their application to the arts and manufactures. Several specimens are on the table illustrating the manufacture of iodine and alkali from kelp. They were exhibited by Mr. Ward, county Donegal, Ireland. The manufactory in which these are produced is on a very large scale, and gives employment to a great number of persons in the neighbourhood, showing the advantage of the judicious application of industry to a raw material (sea-weed) which otherwise would be wasted.

An ingenious application of the science of chemistry

consists in the manufacture of artificial essences of pears, pine-apples, and other fruits. A few specimens which I have received from Mr. Piper, of Upper Winchester Street, Pentonville, are on the table. In the concentrated form the smell is rather acrid, but when diluted, the resemblance to the fruit is recognised. The best imitations are the pine-apple and the jargonelle pear; the green gage, apricot, black currant, and mulberry, when properly mixed, are fair imitations. They are quite innocuous in the proportions used, namely, a drop or half a drop to the ounce. I have been informed that some of the ices furnished in the Great Exhibition were flavoured with these essences. The introduction of these preparations originated, I believe, in the discovery of the fact, that the peculiar flavour of "pine-apple rum" was due to butyric ether, which has since been obtained from the fruit itself. Further experiments led to the discovery of other artificial essences.

The manufacturers of lucifer-matches are subject to a dreadful disease, occasioned by the fumes of the phosphorus, which is one of the ingredients in the manufacture. Phosphorus, as you all know, has a great affinity for oxygen, and at the ordinary temperature of the air it undergoes a slow combustion, emitting fumes of phosphoric and phosphorous acids, which, if inhaled, are very deleterious. By the process lately discovered by M. Schrötter, an Austrian chemist, phosphorus is reduced to a condition perfectly innocuous; it may be handled and even reduced to fine powder, in which state it is equally serviceable for the purposes of the manufacturer. Messrs. Sturge, of Birmingham, who are the proprietors of the

patent and exhibited specimens, exerted themselves to complete their arrangements for the manufacture on the large scale, in order to be in time for the Exhibition. The importance of the discovery might have given a claim for the Council medal; but the discoverer, not having been the exhibitor, was excluded by the regulations; and the exhibitors, not having been the discoverers, could only claim as manufacturers.

Here is a specimen of an improved method of electro-plating, the discovery of which is claimed by Mr. Lyons, of Birmingham. By the former process the silver was deposited with a dull crystalline surface, and required brushing with a wire-brush and burnishing to make it bright; by the improved method the silver is deposited bright in the first instance. This is effected by the addition of bisulphuret of carbon to the solution. Mr. Lyons put in a claim for a prize as the inventor, and as the question related to a chemical process, it was transferred from Class XXIII. to Class II. The patent was taken out in March 1847, in the joint names of Lyons and Mulward, the latter of whom disposed of his share to Messrs. Elkington, who have worked the patent, leaving Mr. Lyons to seek his remedy in Chancery; on the other side, I have heard rather a different account, and mention the case as an important improvement in a chemical process, in which the claim is disputed.

I think I have said enough to show that the Great Exhibition has acted as a stimulus to those who are commercially engaged in the application of chemistry to practical purposes. There is another class of men on

whom it was calculated to exert an influence of rather a different description: I allude to those who study the abstract science of chemistry philosophically, with a view of extending the general stock of knowledge. Such men do not require the stimulus of a Great Exhibition; their stimulus is the pleasure they feel at each step of their progress in the developement of science, the evidence which they see of the wisdom displayed in the adaptation of the materials of which this earth is composed to the purposes for which they are intended. But these researches, if carried on with a vague, undefined thirst for discovery, are less likely to be attended with a really useful result, than they would be if directed to some practical object. Communication between the philosophical chemist and the chemical manufacturer is, therefore, desirable; the opportunity for such communication was afforded by the Great Exhibition, which also tended in other respects to promote the general extension and diffusion of knowledge. Persons engaged in the same pursuits in different parts of the world met and compared notes, exchanged information, and in many instances laid the foundation for future correspondence.

Many of the exhibitors illustrated their processes by a series of specimens showing the progressive changes from the raw material to the finished product. For example, in the manufacture of alum we had alum slate in its several stages of decomposition resulting in plumose alum, from which are derived some of the magnificent crystals before alluded to. The alum slate consists of alumina, silica, bisulphuret of iron, and bituminous matter. It exists in

some deserted coal-mines. By the action of atmospheric air the bisulphuret of iron undergoes spontaneous decomposition, the iron attracting oxygen; another portion of oxygen combines with the sulphur, forming sulphuric acid, part of which unites with the oxide of iron, and part with the alumina, forming plumose alum. From this plumose alum the sulphate of iron is obtained, and also the alum of commerce—potash being added to replace the iron. The specimens on the table, which came from Mr. Wilson, of Hurlet, near Glasgow, have been hermetically sealed in the glass case for more than a year, and have undergone no perceptible change. A considerable volume of air is required to effect the spontaneous decomposition of the alum slate.

The series of lakes and carmines, with the varieties of the cochineal insect and the *opuntia cochinillifera*, on which it feeds, affords a complete and interesting illustration of this subject.

In the raw materials and drugs comprised in the materia medica, the several classes of products, &c., were collected in groups to show the varieties. For example, there were varieties of sarsaparilla, rhubarb, scammony, opium, cloves, nutmegs, cardamoms, with gums, resins, seeds, oils, barks, &c. Many of these objects were also exhibited among the collections of the localities whence they are derived; and it is worthy of remark, that in many instances the latter specimens were inferior to those in the English collection—an illustration of the fact that the commercial enterprise existing in this kingdom attracts

the best of everything from all parts of the world, in the same manner as our metropolitan fish-market attracts the best fish from the sea-side. As soon as the value of any product or commodity is known it generally finds its way to England.

Here is a series of specimens of scammony from the English collection. No. 1 is pure; the others are more or less adulterated, down to No. 5, which is not worthy of the name of scammony. In the Turkish collection, where we might have expected to find scammony unusually fine, No. 1 is about on a par with No. 3 in those above mentioned, and No. 5 would not be recognised as scammony except by the label on the bottle. It is only within a few years that pure scammony has been known in England, and its introduction arose from the circumstance of several samples of scammony being analysed and found to be adulterated (chiefly with starch and chalk) to an extent varying from about 15 to 60 per cent. The fact being reported to the merchant abroad, he replied that he made it to suit the demand, and mixed it according to the price. He said he would send it pure if desired, but it would be dear in proportion. From that time "virgin scammony," as it is called, has been in the English market, but it has not yet found its way to the continent of Europe. Several foreign professors, lecturers on materia medica, and possessors of extensive museums, had never seen pure scammony until they saw it at the Great Exhibition, and were glad to obtain a few ounces as a specimen to take home with them as a curiosity. Similar remarks may be made

with regard to opium, of which we had specimens from various localities. This is a drug which, like many others, is adulterated to suit the demand.

In the Turkish collection there was pure otto of roses, and also oil of geranium (as it is called), with which it is usually mixed. Similar specimens are on the table from the English collection. It is only recently that these two articles have been imported separately, and this is decidedly an improvement, as the public may now purchase some of each, and mix them according to taste. In the Indian collection we have the grass oil, which appears to be identical with the so-called oil of geranium, showing that the latter name is erroneous. It is the product of one of the andropogons, of which there are three specimens on the table. In several other instances the Exhibition has assisted in correcting errors in the identification of vegetable products, and furnished a clue to further investigation.

Among other results to be anticipated from the Great Exhibition, the probable extension of commerce may be mentioned. In some departments I am aware that opinions differ on this subject; and it may be the case with articles of luxury, such as decorated furniture and ornamental wares, that the sudden influx of an unusual supply from abroad may for a time overstock the market. Whatever may be the case in other branches of industry, I do not anticipate any stagnation in the department now under consideration as the result of the Great Exhibition. I should rather expect that fresh sources of commercial industry would be opened by the exhibition of products

and materials which, in the localities where they are indigenous, may be obtained at little cost, and which might be valuable acquisitions in other places.

The Indian collection contained many chemical and pharmaceutical products which might be advantageously introduced, and I am informed that negotiations are already in progress for the extension of trade in that quarter. I need not enlarge on this subject, as the productions of India form the materials for a future lecture by Dr. Royle.

British Guiana furnished numerous products, some of which are on the table. Several varieties of capsicum, starch, meal, gums, resins, fruits, &c. Here is the meal of the bitter cassava (*janipha manihot*), which is separated from the juice by means of this long cylindrical basket called a cassava-squeezer. When filled with the bruised root, a weight is attached to it which contracts the diameter, and the juice escapes through the interstices—a very different apparatus from the hydraulic press used in this country for the same purpose. The juice in its original state is poisonous, but by boiling and fermentation it is deprived of its deleterious properties, and converted into a condiment called cassareep. It is estimated that an acre of ground devoted to the cultivation of the bitter cassava would yield a gross return of above 78*l.*, reckoning the meal at 1*d.*, the cassareep at 1*s.* 5*d.* a pound, and the starch at 40*s.* a hundredweight.

From the interest with which our foreign visitors examined the British productions in the class now under consideration, and the communications which have been

made respecting many of them, there is every reason to anticipate that the extension of commerce will be reciprocal.

The Exhibition has also been the means of directing attention to those laws which interfere with the free developement of industry and the progress of the arts and manufactures. It has, unfortunately, been too much the policy of the legislature in this country to impose heavy taxes and restrictions on industry, and although some relief has lately been afforded, much remains to be done. The subject addresses itself especially to a society devoted to the encouragement of the industrial arts. We have seen in the Great Exhibition a striking example of the effect of the removal of such burdens on industry in the improvement which has taken place in the manufacture of glass since the repeal of the duty.

Glass-making is a chemical art, and it is in this sense that I allude to it, although it comes under another section as a branch of industry. As long as the duty was in force, it was an obstacle to improvement. The amount of the duty was a small portion of the evil compared to the inquisitorial restrictions inseparable from the collection of a tax of this description. Every operation of the manufacturer was conducted under surveillance. He had no inducement to deviate from the regular routine of his business with a view of discovering an improved process; for if he tried an experiment, the eyes of the officer were upon him. He must pay the duty at all events, and whatever might be his success, he could not secure to himself the advantage, as the secret was in the possession

of another over whom he had no control. It would be difficult to exaggerate the obstructive and withering influence of this system of espionage, or to contrive a more effectual bar to the progress of any industrial art. But as soon as the incubus was removed, a new era in the history of glass-making commenced, and the Crystal Palace was called into existence as a monument to commemorate the event. Within the Crystal Palace we find numerous specimens of glass, adapted to a variety of purposes to which it had not previously been applied. Many of these improvements and appliances are in their infancy, and it is impossible to foresee where they will end.

I mentioned that several of the leading chemical manufacturers in France and Germany did not exhibit. This did not arise from the fear of being left behind in the competition, but, I rather suspect, from an opposite cause. In the manufacture of certain chemical products in which spirit of wine is required, the English chemist, whose spirit is heavily taxed, cannot compete with the French or German chemists, who obtain their spirit at about a fourth of the price. On this account many products are largely imported which would otherwise be made in this country. Some of the foreign makers of such products could have made a magnificent display at the Exhibition, but by so doing they might have given umbrage to some of their customers. This is an inference which may fairly be drawn from the absence of certain names from the list of exhibitors; and I mention it to show the influence of high duties in crippling British industry. The difference between the spirit duty in

England and in Scotland almost drives the English chemist out of the field in the manufacture of chloroform and some other articles derived from or prepared with spirit, but not coming within the definition of "spirit mixtures."

I am aware that there are practical difficulties in regard to the spirit duty; these, however, do not apply to the tax upon paper, which in some branches of its manufacture has derived improvements from chemical processes. Those who duly estimate the influence of education must be sensible of the impolicy of placing a check on improvements and economy, in the manufacture of the material on which instruction is conveyed.

If the plea of necessity or some countervailing advantage could be urged in favour of these taxes upon industry, we might patiently submit; but it is not so easy to be reconciled when we find that an amount equal to the whole of the paper duty, together with the entire receipts of the Great Exhibition, is likely to be absorbed in the expenses of a disastrous and hopeless war, of which it is emphatically observed in "The Times," of Monday last, "Our yearly outlay in this agreeable work is about four times the total sum devoted to the purposes of art, science, and public education in the United Kingdom."

The Industrial Exhibition was designed as an antidote to such calamities, as a means of promoting peace and harmony by the encouragement of commercial and friendly intercourse throughout the world. The discussion of the antidote naturally suggests an allusion to the existence of the poison.

The necessity for an amendment in the patent laws is

another subject, which has been brought prominently forward by circumstances connected with the Great Exhibition. I am aware that a Committee of this Society has been engaged in the endeavour to obtain this amendment. The Bill having been thrown out, I trust these efforts will be renewed with more success early next session. There are several chemical inventions, among many others, which will be affected by the result.

The Great Exhibition has furnished numerous contributions to museums, illustrating art, science, and industry. Among these, the British Museum, the Museum at Kew, and the Museum of Economic Geology, may be mentioned as the three public institutions which have participated. Among the chartered or private societies, I may include the Chemical, Pharmaceutical, Geological, Linnean, and Zoological. In these institutions the specimens are preserved for reference and examination by those who are interested in the several subjects illustrated.

I ought not to pass over the distribution of prizes among other elements of the Great Exhibition. It has been customary to give prizes at the Expositions in France and in other places, and it is supposed by some that this is a necessary accompaniment of an exhibition. The prizes are intended, first, as an extra stimulus to industry; secondly, as a reward of merit. With regard to the first of these objects, I very much question whether the desire to obtain prizes induced any persons to exhibit who would not have done so in the absence of this prospect: and I also doubt whether among the exhibitors the proposed honorary distinction operated as an extra stimulus to

exertion. As rewards of merit, I am inclined to the opinion that the prizes were a fallacy. The same prize being given for very different degrees of merit, those who deserved it most naturally appreciated it least, and *vice versâ*, consequently the amount of reward is *inversely* in the ratio of the degree of merit. The reward which exhibitors most desire, and which is to them of the most substantial importance, is the approval and patronage of the public; and the publication of a detailed report prepared by competent persons in each class, and giving to each exhibitor the credit which is his due, would give more general satisfaction and operate as a greater stimulus than the distribution of 2918 medals precisely similar for performances totally different.

In conclusion, I may advert to the probable influence of the Great Exhibition in promoting education in chemistry and pharmacy, by drawing attention to the importance of institutions in which these branches of science are taught. In the present state of the law in this country, no school of chemistry or pharmacy can exist, unless liberally assisted by donations or subscriptions. Even the Royal College of Chemistry, notwithstanding the prestige of the name of Prince Albert as its head, would have been in the "Gazette" long ago if it had not been sustained by royal munificence and public liberality. The school at the Museum of Economic Geology is, I believe, almost entirely supported by public funds. The school of the Pharmaceutical Society has been kept up for some years at an expense of several hundreds per annum.

Those who have examined the chemical and pharma-

ceutical products in the Exhibition must be aware of the necessity of some special training and education for those who are engaged in this branch of scientific industry; yet the law neither requires any qualification, nor recognises it where it exists. The pharmaceutical chemists have been endeavouring for several years to obtain a remedy for this defect. From the time that the Great Exhibition was first proposed I have considered it a move in the same direction. Supported by this Society, which is devoted to the general advancement of science in its various practical applications, and including in its scheme every branch of industry, it appeared to be the duty and the interest of every class to support the undertaking. It afforded the opportunity for an honourable competition between British chemists and the chemists of other nations, and for useful interchange of ideas between persons engaged in the same pursuits; it was calculated to promote harmony and good fellowship through the medium of scientific and commercial intercourse. Its general tendency was to unite, and therefore to strengthen, the hands of those who, in their several departments, are engaged in the advancement of science, and its application to commerce and the arts.

LECTURE V.

ON

THE CHEMICAL PRINCIPLES INVOLVED IN THE MANUFACTURES OF THE EXHIBITION AS INDICATING THE NECESSITY OF INDUSTRIAL INSTRUCTION.

BY

LYON PLAYFAIR, C.B. F.R.S.

LYON PLAYFAIR, C.B. F.R.S.

ON

THE CHEMICAL PRINCIPLES INVOLVED IN THE MANUFACTURES OF THE EXHIBITION.

THE industrial products of the different countries represented at the Exhibition showed, as a marked feature of ascending Civilization, that civilized states differ from barbarous nations in their manner of employing natural forces as aids to production. In the less advanced State, human labour, often exhibited with an endurance and patience scarcely conceivable to Europeans, attained good results, though not superior to those produced by European methods involving quick execution with little manual labour. I might refer you, as an example, to the fine blue glazed tobes worn by the higher class of Africans. This cloth, dyed with indigo, receives its gloss by the laborious process of rubbing with the shell of a snail as hard as the force of the wrist can bear. About fifty years since, our handloom weavers used a round bottle for a similar purpose, but now our calenderers give, in the same time, to miles of cloth a gloss superior to that produced by this infinitely laborious process to a few inches of the

material. It would appear that the less civilized nations attain a high degree of excellence in manufactures when they depend on mere ingenuity and labour, as in the muslins of Dacca and Chunderee, and do not involve an intimate acquaintance with natural forces. So far as regards beauty of design and the harmony of colours, European nations had little to teach, but much to learn. The rude pottery of Tunis was more elegant in form than the common pottery of modern Europe. The shawls and carpets of India, both as to design and harmony of colouring, were unequalled. So long as the manufactures involved human labour and a perception of beauty as their principal elements, the less civilized states equalled, and often excelled, the productions of Europe. But when economy of time and of labour, or an enlightened comprehension of a natural force, became essential conditions, then the striking progress of European manufactures was manifested.

The progress of civilization, with its necessary increase of human wants, compelled man to invent means for their gratification. The study of natural forces then became necessary, because their employment not only added much to his power, but also materially economized his time. The cleansing of the Augean stables by manual labour was impossible even to the enduring powers of Hercules, but by the use of a natural force, in the form of the waters of the Alpheus, the work was speedily and effectually accomplished.

The position of nations in the scale of civilization depends upon their greater or less acquaintance with, and employment of, natural forces. All nations have a concep-

tion of their use, but their relative success arises from their applying them to the best advantage and under the most favourable circumstances. In the attempt to storm the fort of Arcot, the Rajah drove before him numerous elephants, armed with iron plates, in the hope that the gates would yield to these living battering-rams. But the gallant Clive met this ill-applied, by a well-applied, force. The eighth of an ounce of gunpowder, propelling an ounce of lead from an iron tube, was sufficient to alter the direction of this misused force, and to cause the huge beasts to turn and trample upon the army using them as allies.

Mechanics being a deductive science, and naturally growing from the observation of common phenomena, afforded powers which man availed himself of in an early state. The separate action of two mechanical forces being known, the result of their combined action can be predicated. But in chemistry it is very different. Two bodies, such as muriatic acid gas and ammoniacal gas being brought together, no previous reasoning could tell us that from these two gases a solid would be produced; and nothing inherent in themselves could enable us to say, that the acid character of the one and the alkaline character of the other would wholly disappear in the resultant. Chemistry, therefore, in its present state, as Mills has shown, is not so much a *deductive* as an *experimental* science. Before it could be applied to the purposes of Industry, its experience had to accumulate, and its teachings to be appreciated and systematized. This accumulation of experience has been going on from the time of Tubal-Cain until now,

and every day, in adding new facts to its stores, materially augments its powers. It is not, therefore, surprising that it is one of the last of the sciences which, as a branch of systematized knowledge, has offered its services to man; yet, during its short existence as a separate science, it has increased human resources and enjoyments to a greater degree than any of its elder sisters. If I can show you this by proofs derived from the Exhibition, it will naturally follow, that the study of Chemistry is essential to those engaged in manufacturing Industry.

The wants of civilization and the effects of competition require the effective application of increased power, both with regard to economy of labour and of time; and, in the gratification of these wants, there is a constant aim to render objects apparently of little value useful and productive. These, the benefits conferred upon industry by mechanical science, as shown by Babbage and others, are also afforded still more strikingly by her younger sister, Chemistry. Examining the various applications of Chemical Science to manufactures, they naturally divide themselves into the following three heads, which I therefore adopt as the basis of my Lecture.

1. Chemical appliances which have added to human power, either by furnishing substitutes for mechanical contrivances, or by affording tools and methods of arriving at results formerly impossible.

2. Methods of producing economy of time, generally resulting from a constant tendency to simplification.

3. Methods of utilizing products apparently worthless,

or of endowing bodies with properties which render them of increased value to industry.

When a manufacture is already established, the results of competition not only compel an increasing attention to the economy of power or of time, but also require an increase of the industrial value of the article offered for competition. He that can replace an expensive mechanical power by a cheap chemical process, or can economize production by the happy adaptation of natural forces, must possess advantages over his less skilful competitors. Vulcan produced his works more economically than the mere mortal blacksmiths of his time, by availing himself of the fires of Mount Etna for his forges. The possibility to do what previously could not be done generally effects a moral as well as a physical result. The communication of a new power often occasions great social changes. It has been justly said, that the discovery of the Greek fire projected from the walls of Constantinople "saved Europe from desolation by the Saracens;" and it is equally true, that the personal animosity of warriors and the hostile spirit of nations have been much subdued by the new system of tactics introduced when a German monk, in deflagrating a mixture of sulphur, nitre, and charcoal, discovered gunpowder. Morality was improved and crime lessened, when the brilliant lighting of our streets by the introduction of gas made every passer-by a detective policeman; just as the cares, anxieties, and expenses of a government, will be diminished by a fuller developement of the electric telegraph.

In addition to the direct communication of power, the increased economy of time resulting from chemical appliances is of immense importance in manufactures. This sometimes follows the discovery of new bodies endowed with peculiar properties, but it far more commonly arises from the reduction of a complex to a simple process. It is with Chemistry as with Mechanics; the progress of discovery is in the direction of simplification. The simplification of complex processes is the economy of labour, the husbanding of wealth. Industry, in its progress, continually finds more ready means of cultivating and reaping fields long in its possession. You all recollect the story of poor Ho-ti and the pig, told with such delightful vivacity by Charles Lamb. When Ho-ti's house, containing a litter of young pigs, was burned to the ground, it was natural that he should discover the delicate taste of roasted pig; and it was equally natural, as a consequence of this discovery, that the inhabitants of Pekin should introduce pigs into their houses, and burn them down, when they desired to participate in a dish so savoury: but it was a great discovery when an ingenious person found that a common fire would do equally well, and that it was not absolutely necessary to burn down a house every time a pig had to be dressed. "By such slow degrees," concludes the Chinese History, "do the most useful and seemingly the most obvious arts make their way among mankind." The moral of this well-known story is of every-day occurrence in the Chemistry of the arts. Not a year passes without the most mature processes of manufacture being further simplified and economized. It is

with industry as with nature; many of the lower animals have a repetition of organs, destined for the performance of similar functions exercised by single organs in the higher animals. Various stomachs and several eyes in the lower creatures are not more effective than one stomach and two eyes in man. The law of repetition of organs is like the complex processes of manufactures, represented by fewer but more perfect methods as civilization ascends. Argus, with his hundred eyes, was not nearly such a practical man as a Cyclops with one eye; the hundred eyes of Argus were found napping when work had to be performed, but with the one eye of the Cyclops the trident was forged which assured to Neptune the empire of the sea. The industrial position of England has been gained by her perception of this truth, and by her constant endeavours to replace complex processes of manufacture by means more simple and perfect.

The third division, into which I have divided chemical appliances to Industry, is one peculiarly characteristic of advancing civilization. European nations, as they increase in wants, examine every material, to see if it be adapted to their ministration; they do not, like the African Dokos, bury their heads in the ground, and shaking their legs in the air, thank the Supreme Being that they are content with snakes, ants, and mice, for their food. Using their heads for sublimer purposes, they observe and investigate the phenomena and properties of each body, so as to ascertain how far it may be made subservient to their desires. In these investigations Chemistry offers vital aid: she, like a prudent housewife, economizes every scrap. The

horseshoe nails, dropped in the streets during the daily traffic, are carefully collected by her, and reappear in the form of swords and guns. The clippings of the travelling tinker are mixed with the parings of horses' hoofs from the smithy, or the cast-off woollen garments of the poorest inhabitants of a sister isle, and soon afterwards, in the form of dyes of brightest blue, grace the dress of courtly dames. The main ingredient of the ink with which I now write was possibly once part of the broken hoop of an old beer-barrel. The bones of dead animals yield the chief constituent of lucifer-matches. The dregs of port-wine, carefully rejected by the port-wine drinker in decanting his favourite beverage, are taken by him in the morning, in the form of Seidlitz powders, to remove the effects of his debauch. The offal of the streets and the washings of coal-gas reappear carefully preserved in the lady's smelling-bottle, or are used by her to flavour blancmanges for her friends. This economy of the Chemistry of Art is only in imitation of what we observe in the Chemistry of Nature. Animals live and die; their dead bodies, passing into putridity, escape into the atmosphere, whence plants again mould them into forms of organic life; and these plants, actually consisting of a past generation of ancestors, form our present food.

The objects of the Exhibition were divided into—1. Their raw materials; 2. The machinery used in their preparation; 3. The manufactures themselves; 4. The fine art employed to adorn them. I would that I had time to take even a general chemical survey of these four divi-

sions, and show you how everywhere Chemistry is affording her aid; but, as this is impossible, I must content myself with isolated examples from the manufacturing department only, adducing them, however, merely as indications of the universal presence of the Science.

Iron Smelting.

Let us select the smelting of iron* as an example of the teachings of Chemistry. If practice, unaided by Science, be sufficient for the prosecution of manufactures, this venerable art must be thoroughly matured, and Science could scarcely expect to be of much use to it in its present state. But while we find much to admire in the triumphs of practical Experience, there is yet great room for the improvement of this art. The cheapness of iron ore, and of the coal used in its smelting, has been so great, that, regardless of their capital importance to this country, we, like careless spendthrifts, use them without thought of the future.

The mode of smelting iron consists in mixing the ore with lime and coal, the former producing a slag or glass with the impurities of the ore, while the coal reduces the oxide of iron to its metallic state. Much heat is required in the process of smelting, but the cold air blown in, as the blast, lowers the temperature, and compels the addition of fuel, as a compensation for this reduction. Science

* Although the smelting of iron is not strictly within the division of manufactures, according to the classification, its importance to this country will authorize an exception in its favour.

pointed to this loss, and now the air is heated before being introduced to the furnace. The quantity of coal is wonderfully economized by this application of Science; for instead of seven tons of coal per ton of iron, three tons now suffice, and the amount produced in the same time is increased nearly sixty per cent. Assuredly this was a great step in advance. Could Science do more?

Professor Bünsen, in an inquiry in which I was glad to afford him aid, has shown that she can. We examined the furnaces, in each portion of the burning mass, so as fully to expose the operations in every part of the blazing structure. This seemingly impossible dissection was accomplished by the simplest means; the furnaces are charged from the top, and the materials gradually descend to the bottom; with the upper charge a long graduated tube was allowed to descend, and the gases streaming from ascertained depths were collected and analyzed. Their composition betrayed with perfect accuracy the nature of the actions at each portion of the furnace, and the astonishing fact was elicited, that, in spite of the saving produced by the introduction of the hot blast, no less than 81½ per cent of fuel is actually lost, only 18½ per cent being realized. If, in round numbers, we suppose that four-fifths of the fuel be thus wasted, no less than 5,400,000 tons are every year thrown uselessly into the atmosphere, this being nearly one-seventh of the whole coal annually raised in the United Kingdom. This enormous amount of fuel escapes in the form of combustible gases, capable of being collected and economized; yet in spite of these well-ascer-

tained facts, there are scarcely half-a-dozen furnaces in the United Kingdom where this economy is realized by the utilization of the waste gases of the furnace.

Large quantities of ammonia are annually lost in iron-smelting, which might readily be collected. Ammonia is constantly increasing in value, and each furnace produces and wastes at the least 1 cwt. of its principal salt daily, equivalent to a considerable money loss. With the low price of iron, this subsidiary product is worthy of attention. As I write, a Welsh smelter has visited me, to say that he has adopted this suggestion with advantageous results. I might adduce other improvements introduced by Chemistry in the smelting process; but these will suffice to show you that she has added to human power by increasing production, while she has also economized both the time and the materials employed.

Textile Fabrics.

Without the aid of Chemistry, it would have been impossible for textile fabrics to have attained their present developement. The bleaching of cotton and linen was not much practised in England until about a century since: before that time, they were sent to Holland, where the operation of bleaching consisted in steeping them in potash for a few days, afterwards for a week in buttermilk, and then exposing them for several months on a meadow to the influence of the sun and moisture. A great improvement was made in Scotland, by substituting sulphuric acid for sour milk; and the immediate effect was, to reduce the time from eight to four months. In 1785, a French

Chemist suggested the use of chlorine as a means of hastening the process, and, in the last year of the eighteenth century, a compound of this gas with lime was introduced by Tennant of Glasgow. The developement of the cotton manufacture now became immense. By a happy adaptation of other chemical processes, in conjunction with the bleaching power of chlorine, the time required for the whitening of cotton and linen fabrics was at once reduced from months to hours, while the miles of outstretched calico, defacing the verdure of country districts, disappeared, the whole operation being carried on within the small space of an ordinary factory. You may imagine what an impulse this gave to a trade so important to us. The bleaching of calico now consists of a chemical operation of great precision; that of silk and wool has not yet been so thoroughly comprehended by Science, and consequently has not derived so many advantages from its application.

A greater acquaintance with the theory of bleaching has led to a better understanding of the very ancient practice of washing. The washing of domestic linen is by no means an operation too insignificant for the attention of the Chemist. A dozen shirts may cost 3*l.* 12*s.*, this being the united interest of the producer, cotton-spinner, and shirt-maker. These shirts will last three years, with care, and supposing three to be washed each week, the cost of washing—that is, the washerwomen's interest in the dozen shirts—amounts to 7*l.* 16*s.*, or more than double that of the cotton-spinner. In fact, the cost of washing is about one-twelfth the income of a family of moderate means. Taking rich and poor together, and estimating the cost of

washing at no more than 3*d.* per head weekly, the annual charge of washing to the metropolis alone is 1,535,060*l.*, which is equal to about one-twenty-fifth of the whole capital invested in the cotton manufactures of the United Kingdom. Hard water usually contains lime, and in washing that earth unites with the fatty acid of soap, producing an insoluble body of no use as a detergent. For every 100 gallons of Thames water, 30 oz. of soap are thus wasted, before a detergent lather is formed. In personal ablution, we economize this excessive waste by the uncomfortable practice, universally followed in London, of taking about an ounce of water into the hands, and converting it into a lather, the water in the basin being only employed to rinse this off, instead of aiding in the detergence. But in washing linen this plan cannot be followed, every particle of the lime being removed before the soap becomes useful; this, as a matter of economy, is frequently accomplished by carbonate of soda, as being cheaper than soap. The amount of soap and soda salt thus wasted in the metropolis has been stated to be equal to the gross water rental. Hard water, besides wasting soap, produces a greater tear and wear of clothes.

All these facts are well known to manufacturers,and hence the care with which a water is selected before the seat of a manufactory is determined. Why, then, should we not attend to our domestic manufactures, considered trifling only because they are carried on with a great division of labour, unseen in its aggregate? Yet these domestic manufactures are of more importance, economically, than those carried on in large and imposing factories.

I wish I had time to refer, with sufficient detail, to the discovery of Mercer, who has shown that the immersion of cotton in soda or in sulphuric acid causes an equal contraction of the fibres, thus producing the mechanical effect of a loom. If very fine calico, containing as much as 180 picks to the inch, be thus treated, it contracts to calico of 260 picks to the inch—a fineness not yet attained by any mechanical contrivance. This calico, in addition to its acquired fineness, has also assumed powers which enable it to receive colours superior to those assumed by ordinary calico. Before leaving this important discovery of Mercer, I should allude to one other by the same chemist. The French calico-printers employ mousselines-de-laine consisting altogether of wool, while in England we use a much cheaper fabric, consisting of wool and cotton. The colours on this mixture are, however, extremely meagre when compared with the former; but Mercer has shown that the mixed fabric acquires the properties of the other, when it is treated with a bath of chloride of lime. This, one of the most important discoveries ever made in calico-printing, has been of great value to this country.

I cannot, however, allude to all the triumphs of Chemistry in calico-printing, an art which has grown with the growth of Chemistry and strengthened with its strength. The knowledge of mordants and of colours, and the other results of chemical discoveries, are of every-day occurrence. Let us take one of the last examples. Lapis lazuli, long celebrated for its beautiful blue, almost ranked among the precious stones, and was sold at a price which put it quite out of the reach of the calico-printer. But chemists,

ascertaining its composition by analysis, soon learned how to make it by synthesis. Artificial ultramarine is now manufactured at three or four shillings per pound. But when it was made, how was it to be fixed on cloth? From its insolubility, its fixation was a real difficulty. Chemists suggested that the ultramarine might be mixed with albumen, which, being coagulated by heat, would retain the colour on the cloth to which it was applied. Whole barrels of the dried white of eggs are now to be seen at calico-print works. Yet this is an expensive process. Could common cheese not be substituted for the white of eggs? Cheese is soluble in ammonia; and the ultramarine, being mixed with this solution, is retained by the cheese, when the ammonia evaporates. Now, therefore, the ultramarine is fastened on by cheese, made from the buttermilk of Scotland, and sold under the name of lactarine.

A recent application of Chemistry to the economy of dyeing deserves especial attention. Madder, the dye most commonly used for calico, after imparting its colour, was considered useless. The large quantities of spent madder constantly accumulating were found exceedingly inconvenient. It was not valuable enough for the manure-heap, and the rivers became polluted in carrying away the waste material. But Chemistry has shown that actually one-third of the colouring matter is thus thrown away, and that simple treatment with a hot acid again renders it available as a dye. These waste-heaps are now sources of wealth, and the dyer no longer poisons the rivers with spent madder, but carefully collects it,

in order that the chemist may make it again fit for his use.

Stannate of soda is a salt largely used by calico-printers. The usual mode of preparing it was, (1), tin was reduced from its ore; (2), this tin was dissolved in muriatic acid; (3), it was oxidized by nitric acid or chlorine; (4), the oxide thus formed was precipitated and redissolved by soda, this bulky, aqueous solution being furnished to calico-printers. Mercer simplified the process, and obtained it in the solid state by two operations: (1), the tin was obtained as before; (2), this tin was fused with a mixture of nitrate of soda and caustic soda, the former oxidizing it, and the latter forming stannate of soda with the oxide thus formed. Young showed in the Exhibition a still further simplification. The common ore of tin is an oxide: why, then, was it necessary to reduce it to the metallic state merely to oxidize it again? He, therefore fused the ore at once with soda, the impurities remaining undissolved; and the salt was made by one operation. I quote this instance as a remarkable example of the tendency of Chemistry to simplify processes of manufacture. The history of this salt is an exact parallel to that of Ho-ti and the pig.

I might refer to the important discoveries of yellow and red prussiate of potash, the formers of Prussian blue; but this would only be to cite one out of innumerable appliances. I prefer, therefore, to finish this part of the subject, by alluding to the resists and discharges used in calico-printing. In order to preserve white patterns in the process of dyeing, the nations of the East, whence calico-printing originated, still employ the most laborious

mechanical devices, each white spot being covered with sealing-wax, or by being tied up and protected from the dye. By the aid of chemistry, we either discharge the colour on the cloth, or we put upon it bodies which resist the action of the mordants and prevent the colour attaching to that particular part. Acids made from the lees of wine (tartaric acid) and from the lemon (citric acid) are now largely used in these operations, and hence come the beautiful patterns we enjoy in our dresses. It was found that, even when the whites were thus obtained, they became soiled in washing off the excess of mordants from the other parts of the cloth; and the only mode of preventing this was, to treat the cloth with a bath of cowdung. Large dairies were consequently necessary adjuncts of a calico-print work. Chemistry has shown that the action of the manure is due to its phosphates; and a mixture of phosphate of soda, phosphate of lime, and size, is now substituted for the filthy baths formerly indispensable. I could spend hours in discoursing to you on the triumphs of Chemistry in the dyeing of textile fabrics, whether of cotton, wool, and silk, or their mixtures; but I must content myself with these few isolated examples, and pass on to other subjects.

Leather.

The manufacture of leather has been less advanced by the application of Chemical Science than any other of the arts. If Simon, the tanner of Joppa, had been able to send leather to the Exhibition, no doubt he would have carried off a medal for leather as good, and made exactly

by the same process, as that of our most eminent manufacturers of the present day. And yet the science of leather production is better understood now than then; but so many physical conditions are involved in the production of good leather, that scientific processes have been unable to satisfy them all. The hides, steeped in an infusion of oak-bark, absorb tannin and are converted into leather. Good sole leather takes about a year to tan, and even calf-skins consume a month in the operation. Chemists have certainly indicated substitutes for bark, containing a greater amount of tannin, and these, as for instance terra japonica, cutch, catechu, and dividivi, produce their effects in half the time; but the leather is said not to be so durable. With sumach, light skins may be tanned in twenty-four hours, and with the aid of alum even in one hour; but the resulting manufactures are not preferred to the old processes. Atmospheric and hydrostatic pressure have been used to hasten the absorption; the refined laws of Endosmosis and Exosmosis have been called in to accelerate the process; heavy rollers have squeezed the solution through the pores; but all these methods have had at the best but a doubtful success. Leather-manufacturers meet men of science by the well-founded assertion, that the resulting leather is too porous, too hard or too soft, or not sufficiently durable; and they revert to their old traditional modes of preparation. I allude to these failures the more especially to show that there is a wide chasm between the chemist's laboratory and the workshop,—a chasm which has to be bridged over by the united aid of the philosopher and the manufacturer. One

without the other does not suffice, but both, working together, may achieve great results. Yet, in bridging over this chasm, they must act on a common plan. If the manufacturer build his half without understanding the principles of construction employed by the other, the sides of the bridge may indeed meet, but they are not constructed to receive the binding influence of the key-stone, and the arch must give way and tumble down.

Having thus shown the comparative failure of Chemistry in revolutionizing this important manufacture, let me take one or two instances from it to prove that, in the details of the working, it has been of use in economizing time and labour, and in affording new uses to comparatively valueless objects. In removing the hair from the hides, previous to tanning, it was customary to shave it with a knife. This process was tedious and imperfect, and the following simple one is now used. Lime-water dissolves the bulbous root of the hair, when the hides are immersed in it for some time, and the hair may then be readily removed by a blunt instrument. By this simple process one man can remove the hair from a hundred kid-skins in about an hour. Still the immersion requires several weeks, while the addition of red orpiment to the lime, as practised by the sheep-skin manufacturers of France, reduces the time to a few hours.

When goat-skins are tanned for morocco leather, it is necessary, in order to adapt them for dyeing, to remove the lime absorbed by the last operation. A solution of *album græcum* cleanses the pores effectually, leaving them so spongelike, that air can readily be forced through them.

Hence the process of tanning is rendered much easier, being in fact completed within twenty-four hours; while the leather is rendered fit to assume the colours so characteristic of morocco. About fifty persons are employed in London to collect the sweepings of dog-kennels for this purpose, and many more in applying them; and I am informed, by Mr. Bevington, that the sum annually paid to the collectors and workmen employed in using this apparently worthless substance, is not less than 5000*l.* in the metropolis alone.

The currier shaves leather to render it of equal thickness, and the shavings were treated as waste, scarcely fit for the manure-heap, but Chemistry has shown that they contain much nitrogen, which renders them well adapted for the formation of the beautiful colour known as Prussian blue.

Mineral and Metallic Manufactures.

The mineral and metallic manufactures are those which obviously have derived most advantages from Chemistry. Glass and pottery are in fact chemical manufactures. The hard-won experience of two thousand years in China has been given to Europeans by a few years' application of Chemistry. Glass, made by the ancients from the ashes of ferns and other plants, is now formed by soda artificially produced from sea salt. The Exhibition showed that this manufacture, far advanced as it is, may still be susceptible of improvement; for, in the French department, glass was shown in which zinc and barytes were substituted for lead. The hardening and production of steel, the

discovery of many new alloys, endowed with properties most important to the arts, and the electrotyping of metals, are familiar examples of chemical appliances; but this very familiarity renders it unnecessary that I should dwell upon them. I, therefore, from want of time, leave these important manufactures, and pass on to others, in which the influence of Chemistry may be less palpable to the general observer.

Soap.

Soap is probably not older than the Christian era, for the soap of the Old Testament seems to have been merely alkali. Profane history, previous to Christ, does not allude to soap, and, in all the detailed descriptions of the bath and of washing, it is never mentioned. Pliny describes its manufacture, but ascribes to it as singular a use as that given to the potato by Gerarde, who, in his "Herbal," assures us that it "is a plant from America, which is an excellent thing for making sweet sauces, and also to be eaten with sops and wines;" so Pliny, in regard to soap, states, that its main purpose was to dye the hair yellow, and that men used it for this purpose much more than women. Gradually its use became more extensive, and its manufacture considerable. Soap generally consists of a fatty acid, combined with the alkali of soda. This soda was imported from Spain under the name of barilla, itself the ashes of plants grown near the sea. As these plants derived their soda from the sea, near which they flourished, Chemistry, though singularly enough in the person of Napoleon Bonaparte, suggested that it might be artificially

made from sea salt. A process for this was perfected, and soda derived from salt has now replaced barilla. From 1829 to 1834 the average annual import of barilla was 252,000 cwt.; it is now almost nothing. But besides this substitution, the cheapness and comparative purity of the soda made from salt is so great, that the manufacture of soap, and consequently of soda, is enormously increased, and probably exceeds ten times the largest quantity of barilla ever imported in one year into this country. Its cheapness and excellence have also had a prodigious effect on the manufacture of glass.

Chemistry has thus produced great economy and increased power of production to the manufacturers of soap by furnishing them with soda prepared directly and artificially from salt, instead of through the organism of plants. This, however, is only one of the benefits conferred on this manufacture by Chemical Science. The fiscal regulations of foreign countries rendered their tallow and fats expensive to British industry. Russia, with almost a monopoly of tallow and linseed oil, thought it good policy to sell them at high prices. But Chemistry pointed out that vegetables, as well as animals, produce similar fats. The fat of beef and mutton exists in cocoa beans; human fat in olive-oil; that of butter in palm-oil; and horse fat and train-oil are in many oily seeds. Was it, then, necessary to submit to the high prices of Russian tallow? Now, palm and cocoa-nut oil largely replace the fat of the Russian oxen and sheep, although the cheap importation of similar fats from Australia and South America has rendered the substitution less necessary.

Perfumery.

Much aid has been given by Chemistry to the art of perfumery. It is true that soap and perfumery are rather rivals, the increase of the former diminishing the use of the latter. Costly perfumes, formerly employed as a mask to want of cleanliness, are less required now that soap has become a type of civilization. Perfumers, if they do not occupy whole streets with their shops, as they did in ancient Capua, show more science in attaining their perfumes than those of former times. The Jury in the Exhibition, or rather two distinguished chemists of that Jury, Dr. Hoffman and Mr. De la Rue, ascertained that some of the most delicate perfumes were made by chemical artifice, and not, as of old, by distilling them from flowers. The perfume of flowers often consists of oils and ethers, which the Chemist can compound artificially in his laboratory. Commercial enterprise has availed itself of this fact, and sent to the Exhibition, in the form of essences, perfumes thus prepared. Singularly enough, they are generally derived from substances of intensely disgusting odour. A peculiarly fœtid oil, termed "fusel oil," is formed in making brandy and whisky. This fusel oil, distilled with sulphuric acid and acetate of potash, gives the oil of pears. The oil of apples is made from the same fusel oil by distillation with sulphuric acid and bichromate of potash. The oil of pine-apples is obtained from a product of the action of putrid cheese on sugar, or by making a soap with butter, and distilling it with alcohol and sulphuric acid, and is now largely employed in England in the pre-

paration of pine-apple ale. Oil of grapes and oil of cognac, used to impart the flavour of French cognac to British brandy, are little else than fusel oil. The artificial oil of bitter almonds, now so largely employed in perfuming soap and for flavouring confectionary, is prepared by the action of nitric acid on the fœtid oils of gas-tar. Many a fair forehead is damped with eau de millefleurs, without knowing that its essential ingredient is derived from the drainage of cowhouses. The winter green oil, imported from New Jersey, being produced from a plant indigenous there, is artificially made from willows and a body procured in the distillation of wood. All these are direct modern appliances of science to an industrial purpose, and imply an acquaintance with the highest investigations of organic Chemistry. Let us recollect that the oil of lemons, turpentine, oil of juniper, oil of roses, oil of copaiba, oil of rosemary, and many other oils, are identical in composition, and it is not difficult to conceive that perfumery may derive still further aid from Chemistry.

Candles.*

The manufacture of candles has recently been much improved by the aid of Chemistry. Tallow candles, or their more expensive substitute, wax, were generally used till within the last twenty years. The tallow itself was long very impure, containing cellular tissue, which was only partially removed in the form of a scum, known as

* I have had the advantage of seeing the admirable Report of Jury XXIX., and have availed myself, with permission of its author, of some new information contained in it.

"cracklings." This impurity rendered the light unsteady, and obstructed the wick. The old method of purification still largely used in this country, though superseded on the continent and in Dublin, whence such good tallow candles were exhibited, has been displaced by a process of treating with sulphuric acid the tallow melted by steam. Much of the smell is thus removed, and a larger amount of a purer tallow is obtained. The researches of Chevreul had shown that fats consist of fatty acids, combined with a kind of sugar named glycerin, which it was important to remove; this glycerin, removed in candle-making, is now used as liniments in cutaneous affections, and is employed as a remedy in deafness and rheumatism. By boiling with lime, an insoluble soap is formed; while the glycerin remains dissolved in the water. This lime-soap, decomposed by a stronger acid, yields the fatty acids in a pure state. But there are generally two solid acids mixed with a fluid one; and the latter is easily removed by pressure, the solid fats remaining. The solid acids are made into the beautiful candles erroneously called "stearine." Various difficulties occurred in this manufacture. The solid acids, crystallizing rapidly, were ill adapted for candles; but the introduction of arsenic in small quantity prevented the crystallization. The public were justly alarmed at this dangerous practice, and the manufacture was threatened with extinction, when it was found that a small per-centage of wax produced the same effect, and that large crystals might even be prevented by a careful regulation of the temperature. This evil was therefore avoided; but a more serious one arose.

The ashes of the wicks, becoming heated, cause the fatty acids to splutter; and this was a grave inconvenience. These ashes, however, form a fusible glass with borax; so the wicks are dipped into a solution of this salt, and the difficulty is removed; a salt of bismuth is also used for this purpose. Snuffers, however, are always troublesome, and a self-snuffing candle was an important want. Chemists have told us that flame is hollow, its centre containing no oxygen capable of supporting combustion; and the wick, being in the hollow part, excluded from the air by its fiery prison, is charred, and diminishes the light. If the wick could be made to turn outwards, it would reach the exterior air and be consumed, whilst the glass formed by the action of the borax on its ashes would also be removed. This beautiful scientific fact was attained by the introduction of plaited and twisted wicks, the tension of the threads forcing the wick to curl outwards to the exterior of the flame, where it is rapidly burned.

Another great improvement now took place. In preparing the commercial stearine from palm-oil or tallow, it is essential to remove the glycerin, and this had been accomplished by saponifying them with alkalies. Sulphuric acid, acting on fats, unites with the oily acids and with glycerin; the former compounds are decomposed by water and become insoluble, while the latter, from being soluble, is removed; the oily acids, blackened with the destroyed organic impurities, are now distilled, and it is found that a jet of steam, heated somewhat in the manner of the hot blast, aids their distillation, the fatty acids passing over in a comparatively pure form, while the

residual black resinous matter is made into black sealing-wax. Candles may now be made from the distilled fatty acids at once, or they may be pressed to remove the oleic acids.

The oleic acid, both from this mode of manufacture and from that by alkaline saponification, is principally exported to France, where it is made into a hard soap. In this country we have yet to acquire the method of doing this. The excellence of the acid saponification is, that it is applicable to palm-oil and to the most impure and fœtid fats; by its means, the finest candles may be made from the waste of the glue-maker and from the oily residues obtained by the decomposition of the waste lyes of the woollen manufacturer and the bleacher. As the first beautiful process of saponification sprang from the abstract researches of Chevreul, so has the last elegant method arisen from the scientific investigations of Frèmy, although both of them have been reduced to practice, with many improvements, by the manufacturers themselves. The importance of the manufacture may be understood when I state that one company (Price's Candle Company) possesses cocoa-nut plantations in Ceylon, and employs eight hundred workmen in its five manufactories in London, using a capital of nearly half a million, and dividing profits to the extent of 40,000*l.* per annum.

Chemistry has not yet done so much for the manufacture of wax candles as might have been anticipated. Wax is still bleached by exposure to air and light, and the operation has been hastened more by mechanical than by chemical contrivances; the bleaching of wax is a tedious

and often a difficult process, and demands greater attention from chemists than it has received; the Brazilian mahogany-coloured wax, produced by a black bee hiving underground, has not yet been bleached by the sun, and might be imported in considerable quantity if Chemistry offered means for removing its colour. I do not allude to what Chemistry offers to do, but it would appear that paraffin and oil from coal, and, possibly from peat, may dispense, to a certain extent, with the necessity for sperm-whale fishing.

Coal-Gas.

The manufacture of coal-gas is an admirable example of the benefits conferred by Chemistry in all the three divisions of its uses; for it not only has economized human power and time, but it has utilized all the products employed in removing its impurities. Coal-gas was only introduced to use at the beginning of this century, and the public prejudice which had to be overcome, and the difficulties to be surmounted in its actual manufacture, may still be remembered by many of my hearers. It was no mean innovation to replace tallow candles and oil lamps by an air streaming through pipes, but the difficulties attending its purification from noxious ingredients appeared even more insuperable than to reconcile the public to the innovation: the gas had an insupportably fœtid odour, and certainly injured health when burned; it discoloured the curtains, tarnished the metals, eat off the backs of books, and covered everything with its fuming smoke. It required a man of courage, as indomi-

table as Winsor, its great advocate, to persuade the public to continue its use until means were found for the removal of these noxious qualities. Here Chemistry, itself the father of the manufacture, was called in consultation. The impurities in the gas are sulphuretted hydrogen, which tarnished the metals, and with sulphuret of carbon produced sulphureous fumes; ammoniacal compounds, which changed the colours of dyes and acted on leather; tarry vapours, which caused the deposition of soot; and all these had to be removed. The ammonia and the tar were partially condensed in tubes kept cool, the sulphuretted hydrogen and carbonic acid were removed by lime, and the ammonia by washing the gas with water. This last operation was the least effective, and new substitutes had to be devised, one of which I may mention; superphosphate of lime, consisting of bones dissolved in sulphuric acid, only required ammonia to make it a powerful and excellent manure; trays of this superphosphate were therefore placed in a chamber through which the gas passed, and thus the ammonia was removed, while the phosphate became enriched. A new method is now extensively employed, and shows the tendency to simplification resulting from discovery. By this method almost all the conditions of purification are satisfied by one process; the gas, after cooling, is at once taken into a chamber containing carbonate of lime and sulphate of iron; these, reacting upon each other, produce oxide of iron and sulphate of lime. The gas, streaming through this mixture, gives up its sulphuretted hydrogen to the oxide of iron, while the carbonate of ammonia, decomposing the lime salt, forms sulphate of

ammonia and carbonate of lime, the lime thus being reconverted to its original state; the gas before being passed into this mixture is occasionally led through chloride of calcium in order to aid the removal of the ammoniacal salt. When the mixture has done its work it is exposed to air, and the sulphide of iron absorbing oxygen is converted into a basic sulphate of iron; hence the mixture is similar in its purifying character, except that it contains sulphate of ammonia, which may be washed out and preserved, while the residue is employed over and over again. By this elegant process the noxious sulphur compounds are utilized in the fabrication of sulphate of ammonia, and the mixture seems never weary of performing its duty; hence not only is the purification performed at one process, but the noxious ingredients are converted into compounds of much value. The waste and badly-smelling products of gas-making appeared almost too bad and fœtid for utilization, and yet every one of them, Chemistry, in its thriftiness, has made almost indispensable to human progress; the badly-smelling tar yields benzole, an ethereal body of great solvent powers, well adapted for preparing varnishes, used largely for making oil of bitter almonds, of value for removing grease-spots, and for cleansing soiled white kid gloves. The same tar gives naphtha, so important as a solvent of Indian rubber and gutta percha; similar tar, when made from wood, yields creosote, a powerful preservative of animal matter, and much employed as a medicinal agent. Coal-tar furnishes the chief ingredient of printer's ink, in the form of lampblack; it substitutes asphalte for pavements; it forms a charcoal when mixed with red-hot

clay, that acts as a powerful disinfectant. When the tar is mixed with the coal-dust, formerly wasted in mining operations, it forms by pressure an excellent and compact artificial fuel; the water, condensed with the tar, contains much ammonia, readily convertible into sulphate of ammonia, a salt now recognised as being of great importance to agriculture, and employed in many of the arts. Cyanides are also present among the products of distillation, and these are readily converted into the beautiful colour known as Prussian blue. The naphthaline, an enemy to the gas-manufacturer by choking the pipes, may be made into a beautiful red colouring matter, closely resembling that from madder. This, by its transformation, promises an important, though hitherto not yet realized useful product. Coal, when distilled at a lower temperature than that required to form gas, produces an oil containing paraffin, largely used as an antifrictional oil for light machinery.

In the isolated cases of manufactures, adduced as types of the importance of chemical appliances to industry, I have referred to general subjects rather than to individual objects in the Exhibition; because these Lectures ought, in obedience to the desire of their Royal suggester, to be indications of consequences rather than references to special excellencies. The illustrations have been restricted to Chemistry, not that I unduly exalt its importance, but that we are wisely instructed to confine our attention to the branch of knowledge most familiar to us. All these instances, however, are real consequential supports of a text which has already been discussed in its general bear-

ings in another Lecture.* The text was this,—that the progress of abstract science is of extreme importance to a nation depending upon its manufactures. It is only the overflowings of science, arising from the very fulness of its measure, that benefit industry. When water falls from a higher to a lower point, it, to a certain extent, increases the velocity of rotation of the earth, and the sum of the increments of the velocity of all falling waters would soon be sensible, were it not that the sun, lifting them up, restores them to their sources, and by rendering them farther from the centre, compensates for the increased velocity given in one locality; while at the same time they fertilize the lands on which they fall. So is it with Science and Industry. The overflowings of abstract Science give their first impulse to the country producing them, but the Sun of knowledge soon raises and distributes them to all lands, which receive benefit in just so far as the ground is prepared for their fertilizing influence. The discoverer of abstract laws, however apparently remote from practice, is the real benefactor to his kind; in reality, far more so than he who applies them directly to industry. Yet in our Mammon-worship we adore the golden calf and do not see its real creator. It is abstract and not practical Science that is the life and soul of Industry; practical appliances are the organs through which the God-born truths pass for the sustenance of its general frame. The cultivators of abstract Science, the searchers after truth,

* "On the National Importance of Studying Abstract Science with a view to the Healthy Progress of Industry." By Lyon Playfair, C.B. F.R.S.—H. M. Stationery Office.

for eternal truth's own sake, are—to borrow a simile, I believe, of Canning—the horses of the chariot of industry; those who usefully apply the truths are the harness by which the motion is communicated to the chariot. But is the chariot drawn by the horses or the harness? Truth to say, in this country of ours,—and mark you well, in no other country in Europe,—we honour the harness, but neglect the horses. It is the harness that is gilt; the hard-working horses too often receive but meagre fare. Now, in all this, I tell you a living truth; one far more connected with the actual material progress of our nation than you may be aware of. The published opinions of Babbage and Herschel, men who have a right to pronounce judgment on this subject, assure us that England is rapidly declining in Science. It is most important that we should ascertain the real cause of this decline. The cause would appear to be, that we chiefly honour those who are useful in our time and generation; that our eyes are too eagerly bent upon the golden prize, for which we are all running; and that we can only afford to throw a kind of theoretical squint of recognition on those men, who are looking for sublime truths, careless as to whether they will have any immediate effect on industrial progress. And yet it is these very men that give strength to the sinews of a future generation, enabling it to keep its place in the industrial struggle of nations. Do not misunderstand me. Science never looks so beautiful as when she aids man to increase his resources and comforts; but the dove would not have brought the olive-branch to the ark of man's hopes unless she had been able to take a higher and longer flight than that embraced in the tree whence she came.

It is no new truth that both abstract Science and Art should have a position intimately allied with, but still thoroughly independent of, Industry. I read mythology wrongly, unless this is strongly shadowed out in the history of the gods. Vulcan, the god of Industry, wooed Minerva with a passionate love, but the chaste goddess never married, keeping always independent, although no celestial ever showered so many benefits on the peaceful arts. Artistic beauty, in the person of Venus, was really wedded to Vulcan, but this ill-assorted union was not a happy one, and Venus often repented the alliance.

Take the case of any philosopher, the most separate from human sympathies and enjoyments, and you will find that from him, though not through him, have sprung numerous appliances for their gratification. The very impersonification of abstract Science was Cavendish, as described by his biographer,* although fortunately for the world, such total abstraction from human sympathies does not frequently exist. "He did not love; he did not hate; he did not hope; he did not fear; he did not worship as others do. He separated himself from his fellow-men, and apparently from God. There was nothing earnest, enthusiastic, heroic, or chivalrous in his nature, and as little was there anything mean, grovelling, or ignoble. He was almost passionless. . . . An intellectual head thinking, a pair of wonderfully acute eyes observing, and a pair of very skilful hands experimenting or recording, are all that I realize in reading his memorials. His brain seems to have been but a calculating-engine; his eyes inlets of vision, not fountains of tears; his hands instru-

* "Life of Cavendish," by Dr. Wilson, p. 185.

ments of manipulation, which never trembled with emotion, or never clasped together in adoration, thanksgiving, or despair; his heart only an anatomical organ, necessary for the circulation of the blood." Yet this man, destitute of passions and of sympathies—who, during his body life, poured down light upon, without warming, the world—has by his mind, which still lives, conferred more real material benefit upon Industry than any of the so-termed "practical" men who have succeeded him. His discovery of the composition of water has given to Industry a vitality and an intelligence, the effects of which it would be difficult to exaggerate.

I have shown in my former Lecture, that a rapid transition is taking place in Industry; that the raw material, formerly our capital advantage over other nations, is gradually being equalized in price, and made available to all by the improvements in locomotion; and that industry must in future be supported, not by a competition of local advantages, but by a competition of intellect. All European nations, except England, have recognised this fact; their thinking men have proclaimed it; their governments have adopted it as a principle of state; and every town has now its schools, in which are taught the scientific principles involved in manufactures, while each metropolis rejoices in an Industrial University, teaching how to use the alphabet of Science in reading Manufactures aright. Were there any effects observed in the Exhibition from this intellectual training of their industrial populations? The official reserve, necessarily imposed upon me as the Commissioner appointed to aid the Juries, need exist no longer.

and from my personal conviction, I answer without qualification, in the affirmative. The result of the Exhibition was one that England may well be startled at. Wherever —and that implies in almost every manufacture—Science or Art was involved as an element of progress, we saw, as an inevitable law, that the nation which most cultivated them was in the ascendant. Our manufacturers were justly astonished at seeing most of the foreign countries rapidly approaching and sometimes excelling us in manufactures, our own by hereditary and traditional right. Though certainly very superior in our common cutlery, we could not claim decided superiority in that applied to surgical instruments; and were beaten in some kind of edge-tools. Neither our swords nor our guns were left with an unquestioned victory. In our plate-glass, my own opinion —and I am sure that of many others—is, that if we were not beaten by Belgium, we certainly were by France. In flint-glass, our ancient *prestige* was left very doubtful, and the only important discoveries in this manufacture were not those shown on the English side. Belgium, which has deprived us of so much of our American trade in woollen manufactures, found herself approached by competitors hitherto almost unknown; for Russia had risen to eminence in this branch, and the German woollens did not shame their birthplace. In silversmith work we had introduced a large number of foreign workmen as modellers and designers; but, nevertheless, we met with worthy competitors. In calico-printing and paper-staining our designs looked wonderfully French; whilst our colours, though generally as brilliant in themselves, did not appear

to nearly so much advantage, from a want of harmony in their arrangement. In earthenware we were masters, as of old; but in china and in porcelain our general excellence was stoutly denied; although individual excellencies were very apparent. In hardware we maintained our superiority, but were manifestly surprised at the rapid advances making by many other nations. Do not let us nourish our national vanity by fondly congratulating ourselves that, as on the whole we were successful, we had little to fear. I believe this is not the opinion of most candid and intelligent observers. It is a grave matter for reflection, whether the Exhibition did not show very clearly and distinctly that the rate of industrial advance of many European nations, even of those who were obviously in our rear, was at a greater rate than our own; and if it were so, as I believe it to have been, it does not require much acumen to perceive that in a long race the fastest-sailing ships will win, even though they are for a time behind. The Exhibition will have produced infinite good, if we are compelled as a nation to acknowledge this truth. The Roman empire fell rapidly, because, nourishing its national vanity, it refused the lessons of defeat, and construed them into victories. All the visitors, both foreign and British, were agreed upon one point, that, whichever might be the first of the exhibiting nations, regarding which there were many opinions, that certainly our great rival, France, was the second. Let us hope that in this there is no historical parallel. After the battle of Salamis the generals, though claiming for each other the first consideration as to generalship, unanimously admitted that

Themistocles deserved the second; and the world, ever since, as Smith remarks, has accepted this as a proof that Themistocles was, beyond all question, the first general. Let us acknowledge our defeats when they are real, and our English character and energy will make them victories on another occasion. But our great danger is, that, in our national vanity, we should exult in our conquests, forgetting our defeats; though I have much confidence that the truthfulness of our nation will save us from this peril. A competition in Industry must, in an advanced stage of civilization, be a competition of intellect. The influence of capital may purchase you for a time foreign talent. Our Manchester calico-printers may, and do, keep foreign designers in France at liberal salaries. Our glass-works may, and do, buy foreign science to aid them in their management. Our potteries may, and do, use foreign talent both in management and design. Our silversmiths and diamond-setters may, and do, depend much upon foreign talent in art and foreign skill in execution; but is all this not a suicidal policy, which must have a termination, not for the individual manufacturer, who wisely buys the talent wherever he can get it, but for the nation, which, careless of the education of her sons, sends our capital abroad as a premium to that intellectual progress which, in our present apathy, is our greatest danger?

It is well to inquire, in what we are so deficient, and what is the reason of this deficiency. Assuredly it does not consist in the absence of public philanthropy or want of private zeal for education, but chiefly rests in that education being utterly unsuited to the wants of the age. In

the thirteenth and fourteenth centuries classical learning was, after its revival, highly esteemed: and its language became the common medium for expression in all nations. A thorough acquaintance with it was an absolute necessity to any one with pretensions to learning. It had a glorious literature, one as fresh as when it grew on the rich soils of Rome and Greece. Its truths were eternal, and were received by us in their traditional mythology, as Bacon beautifully says, like "the breath and purer spirit of the earliest knowledge floating to us in tones made musical by Grecian flutes." And why was that bewitching literature made the groundwork of our educational systems? Does it not show that literature, like art, may have a standard excellence; and that we are content to imitate where we cannot surpass. If the main object of life were to fabricate literati, I would not dispute the wisdom of making classics the groundwork of our education. They are not utterly dead, but, like the dry bones of the valley, they may come together, and have breathed into them the breath of life. In the world there is a constant system of regeneration. Theories exist for a time, but like the phœnix, are destroyed, and rise yet more glorious from their ashes. Animals die, and by their decay pass into the atmosphere, whence vegetables derive their nutriment, and thus death becomes the source of life. But in all this there is no incongruity. A phœnix does not from its ashes produce an eagle, but a phœnix as before. The dry bones of dead Literature may vivify into new forms of literary life. Classical Literature and exact Science are, however, wholly antithetic. If classical Literature be sufficient to construct your spinning-jennies and bleach your

cottons, your system of instruction is right; but if you are to be braced, and your sinews strengthened, for a hard struggle of industry, is it wise that you should devour poetry, while your competitors eat that which forms the muscles and gives vigour to the sinews? With such different trainings, who in the end will win the race? Science has not, like Literature and Art, a standard of excellence. It is as infinite as the wisdom of God, from whom it emanates. All ordinary powers decrease as you depart from the centre; but the power of knowledge augments the farther it is removed from the human source from which it was transmitted. God has given to man much mental gratification in trying to understand and apply to human uses His laws. The great philosopher of Scripture has said, "It is the glory of God to conceal a thing, but the honour of kings to search out a matter." The poet-prophet of the Bible has also told us, that God "turneth wise men backward, and maketh their knowledge foolish." And, therefore, as surely as He is infinite and man finite, until earth passes away, you will have no human standard of scientific knowledge. As this is so, how can we as a nation expect to carry on those manufactures by our sons of Industry, when we do not teach them the nature of the principles involved in their successful prosecution? Solace ourselves as we will with vain thoughts of our gigantic position among nations—Greece was higher than we are, and where is she now? It does not require a lofty stature to see the farthest; for a dwarf on the shoulders of a giant sees farther than the giant,—not that he is less a dwarf, but that he has added the giant's height to his own. The Exhibition showed us many small States

which had thus raised themselves on the shoulders of Science within the last few years, while we are merely hovering about its skirts. Let us take care that our excess of pride in the so-termed "practical" power of our population may not be punished as Arachne was of old. Arachne was wonderfully skilled in needle-work, but presumptuously challenged Minerva to a trial of skill. What chance was there in such an unequal contest? Minerva united Science to her handicraft skill, and this combination insured success. Arachne was justly cast from her proud position among mortals by being changed into a spider, ever spinning the same web in the same way,—the same for wintry blasts as for gentle summer zephyrs.

"You have excelled all other people in the products of Industry. But why? Because you have assisted Industry by Science. Do not regard as indifferent what is your true and greatest glory. Except in these respects, in what are you superior to Athens and Rome? Do you carry away from them the palm in literature and the fine arts? Do you not rather glory, and justly too, in being, in these respects, their imitators? Is it not demonstrated by the nature of your system of public education and by your popular amusements? In what, then, are you their superiors? In everything connected with physical Science; with the experimental arts. These are your characteristics. Do not neglect them. You have a Newton, who is the glory, not only of your own country, but of the human race. You have a Bacon, whose precepts may still be attended to with advantage. Shall Englishmen slumber in that path which these great men have opened, and be overtaken by their neighbours? Say, rather, that all

assistance shall be given to their efforts; that they shall be attended to, encouraged, and supported."—(DAVY.)

All the aspirations of youth are towards Science, especially that depending on observation, but we quench the God-born flame by "freezing drenches of scholastic lore." In the language of "Eöthen," "You feel so keenly the delights of early knowledge! You form strange mystic friendships with the mere names of mountains, and seas, and continents, and mighty rivers; you learn the ways of the planets and transcend their narrow limits, and ask for the end of space; you vex the electric cylinder till it yields you, for your toy to play with, that subtle fire in which our earth was forged. You know of the nations that have towered high in the world, and the lives of men who have saved whole empires from oblivion. What more will you ever learn? Yet the dismal change is ordained, and then, thin meagre Latin (the same for everybody) with small shreds and patches of Greek, is thrown, like a pauper's pall, over all your early lore; instead of sweet knowledge, vile, monkish, doggerel grammars and graduses, dictionaries and lexicons, and horrible odds and ends of dead languages, are given you for your portion, and down you fall from Roman story to a three-inch scrap of '*Scriptores Romani*'—from Greek poetry, down, down, to the cold rations of '*Poetæ Græci*,' cut up by commentators and served out by schoolmasters." Is this horrible quenching of all our youthful innate love of God's truth the education for the youth of a nation depending for its country's progress on their developement? How is it possible that dead Literature can be the parent of living Science and of active Industry?

I need not explain myself as meaning that our youthful aspirations point to science as a fit means for developing our intellectual capacities, and that boyhood is scarcely the time rudely to excise all our longings for an acquaintance with the wisdom of creation, or to cramp and torture the mind by the acquisition of dead languages to the exclusion of all other knowledge. In quoting the beautiful language of "Eōthen," I intend only to express the violence done to our natural instincts, and not to question the excellence of the means employed in teaching classics. It would ill become me, or any one, to speak disparagingly of the wisdom to be derived from a study of ancient authors, or to deny the immense importance of a knowledge of classical literature to education generally; nor would I like to see that education confined to stern realities, divested of the graces and poetry of polite literature. But I do, at the same time, vehemently protest against the exhaustion of all our youthful years by a mere classical tuition, especially in the case of that large class of the community who, by their exertions in industry, have confided to them, in a great degree, the prosperity of their country. As I do not think the teaching of classical literature as practised in our schools to be worthy of the name of education, neither do I apply that title to the communication of scientific knowledge alone,—and you will observe that I have always spoken of it by the term "instruction."—I am propounding no scheme of education, but strongly insisting that instruction in science should form an important part of the education of our youth.

Do not conceal from yourselves that this is the vital difficulty of the question. You may, and I hope will, soon

raise an Industrial University; but this should have its pupils ready trained before it adopts them. Now, it must from itself act downwards, instead of working from the schools upwards. Until our schools accept as a living faith that a study of God's works is more fitted to increase the resources of the nation than a study of the amours of Jupiter or of Venus, our Industrial Colleges will make no material headway against those of the Continent. In Paris we find a Central College of Arts and Manufactures, into which the students enter at an average age of nineteen years, already well trained in the elements of Science, and going there to be taught how to use these elements for industrial application. Three hundred of the best youth of France are annually receiving at this College the most elaborate education, and the best proof of its practical value is the great demand among manufacturers for its pupils, a diploma from it being equivalent to assured success in life. Can you wonder at the progress making by France in industry, when she pours every year an hundred and fifty of these highly educated manufacturers into her provinces? A similar education to this is going on in almost all parts of Europe; but in England only one such institution exists. We have our University and King's College, it is true, and they are productive of much good; and similar Colleges exist in Scotland and Ireland; but their instruction in Science terminates just where the Industrial Colleges of the Continent begin. In fact, the latter would be supplementary and a great support to the former. Government, acting on its own perception of right, in its first national recognition of these truths, now happily dawning on England, has established a School of Mines;

and the experience of this has shown that it is much appreciated, although it labours under the disadvantage of the want of a preliminary education in its pupils, compelling its professors, in its commencement, to be more elementary in their instruction than is well compatible with the proper objects of such a school. Now, while I urge the impolicy of a mere classical instruction to the youth of this country with all the expression which I can give to a matured conviction, do not suppose that I would wish to put all our youth in one Procrustean bed. I again allege, that it is the present system which follows this singular love of uniformity, and clips or extends the dimension of each youth to one common standard. It is against this very confined system that I protest. I think the glorious wisdom displayed in creation, even in the limited extent to which we are permitted to behold it, forms no unapt means of leading man to a worship of its Creator; and, sympathizing as I do to the utmost in our educational endeavours to unite and not to dissever the acquirement of knowledge from that of religion,—a union which, I think, is at once the glory, the pride, and the peace of England,—I cannot perceive how the mere teaching of profane literature can tend to this end in any degree so much as the reverential teaching of God's wisdom displayed in His works, especially when every step in advance of this knowledge produces a social amelioration of the human race. But, while I would regret to see our Colleges retrograde one step in the teaching of classical Literature, it is truly lamentable that Oxford and Cambridge so little encourage the Sciences; for, until the Colleges throw open their widest portals to these, the schools in the country,

deriving their life from them, will do little to reform the present vices of a limited and exclusive education.

In this country we are, in many respects, remarkably unchangeable. Three professions, the Church, the Law, and Medicine, were supposed, some centuries since, to represent learning, and, with a wonderful blindness, they are still accepted as all-sufficient. Industry, to which this country owes her success among nations, has never been raised to the rank of a profession. For her sons there are no honours, no recognised or social position. Her native dignity, if tacitly understood, has never formally been acknowledged. Science, which has raised her to this eminence, is equally unrecognised in position or honours, and, from her very nature, cannot attain the wealth which in Industry solaces the absence of social position. This restriction of learned honours to three recognised professions has a lamentable effect both on the progress of Science and of Industry. Its consequence is, that each profession becomes glutted with ambitious aspirants, who, finding a greater supply than demand, sink into subordinate positions, becoming soured and disappointed, and therefore dangerous to the community. Raise Industry to the rank of a profession,—as it is in other countries,—give to your Industrial Universities the power of granting degrees involving high social recognition to those who attain them, and you will draw off the excess of those talented men, to whom the Church, the Bar, and Medicine, offer only a slender chance of attaining eminence; and by infusing such talent into Industry, depend upon it, the effects will soon become apparent. In foreign countries, professions involving social rank and position arise with

their requirements; in our Nation, we are content with a meagre classification, scarcely sufficient for the middle ages, and not even a reflection of our present wants. These considerations are not mean ones, for, as long as ambition exists in the human mind, their good or bad adjustment will exercise a beneficial or pernicious influence on society.

In the establishment of institutions for industrial instruction, you, at the same time, create the wanting means for the advancement of Science in this country. I have alluded in this Lecture, and have shown in another, that the progress of Science and of Industry in countries which have reached a certain stage of civilization ought actually to be synonymous expressions; and hence it follows that it is essentially the policy of a Nation to promote the one which forms the springs for the action of the other. I think it, therefore, no mean advantage to this nation, that the establishment of Industrial Colleges will materially aid the progress of Science by creating positions for its professors and for those who would willingly cultivate Science, but are scared from it by the difficulties they have to encounter in its prosecution. The great Davy says,—"Science, for its progression, requires patronage; but it must be a patronage bestowed, a patronage received with dignity. It must be preserved independent. It can bear no fetters; not even fetters of gold; and, least of all, those fetters in which ignorance or selfishness may attempt to shackle it. And there is no country which ought so much to glory in its progress, which is so much interested in its success, as this happy island. Science has been a prime cause of creating for us the inexhaustible wealth of

manufactures; and it is by Science that it must be preserved and extended. We are interested as a commercial people—we are interested as a free people. The age of glory of a nation is likewise the age of its security. The same dignified feeling which urges men to gain a dominion over nature will preserve them from the dominion of slavery. Natural, and moral, and religious knowledge are of one family, and happy is the country and great its strength where they dwell together in union." Let me quote, also, from the immortal Bacon on this point, himself the prince of philosophers, and who, as lord chancellor, when he wrote could not be actuated by personal ambition, —"And as founders of Colleges plant and founders of Lectures water, we must next note a defect in public lectures, whether in arts or professions, viz. the smallness of the salary generally assigned them, for it is necessary to the progress of the Sciences that lecturers be of the ablest kind, as men intended for propagating the Sciences in future ages, and not for transitory use. And this cannot be, unless the profits content the most eminent in every art to appropriate their lives and labours to this sole purpose, who must, therefore, have a competency allowed to them proportionable to what might be expected from the practice of a profession. For, to make the Sciences flourish, David's military law should be observed—'that those who stay with the stores have equal with those who are in the action,' or otherwise the stores will be ill attended; so lecturers in the Sciences, as being the guardians of the stores and provisions, whence men in active life are furnished, ought to share equal advantages with them; for,

if the fathers of the Sciences be weak or ill maintained, the children will feel the effect of it." I will not weaken this admirable opinion of Bacon by any remark of my own, for I believe it to contain the real cause of the low state of Science in England. But lest you should think my views partake too much of the *argumentum ad sacculum*, I will protect myself under the caustic wit of Diogenes, who, on being asked, "How it happened that philosophers followed the rich, and not the rich the philosophers?" answered, "Because the philosophers know what they want, but the rich do not."

I must now conclude this Lecture, already much too long, and I do so by once more recalling to your minds its general argument. Chemistry, viewed here as a type of Science generally, has exercised immense influence upon manufactures, having increased human power, economized human time, and communicated important values to bodies apparently the most worthless. Foreign states have acknowledged the fact, that successful competition can only be attained by an attentive study of Science—by making their sons of Industry themselves disciples of Science. England, except in one instance, has hitherto not recognised this truth as a principle of State, and hence her Science languishes, and her capital has to import it from other lands. This points to the necessity of the establishment of Industrial Colleges; but it implies, at the same time, an adaptation of juvenile education to the wants of the age. All this impresses itself upon my mind with a conviction as strong as that the glorious sun sheds its light-giving rays to this naturally dark world of ours. May the Exhibition be the means of raying forth this

truth to our darkening industry! Do not dream of that Exhibition as a thing of the past, rather think of it as a glorious emblem of the future. When Neptune and Minerva disputed as to who should name the capital of Cecropia, the gods resolved that the right should be given to the one who granted to man the greatest benefit. Neptune struck with his trident the earth, from whence sprung a war-horse; while Minerva produced an olive-tree. England, though sharing with Neptune the empire of the sea, ratified the decision of the gods by rearing the emblem of peace. The Exhibition has been an olive-tree, the branches of which have now been spread among all nations, and success for the future will depend upon the care and wisdom with which they are tended, so as to grow into goodly trees. Do not let us, by severing Industry from Science, like a tree from its roots, have the unhappiness of seeing our goodly stem wither and perish by a premature decay; but as the tree itself stretches out its arms to heaven to pray for food, let us, in all humility, ask God also to give us that knowledge of His works which will enable us to use them in promoting the comfort and happiness of His creatures. Our duties in this respect are clearly indicated in the motto of our Catalogue:—

"Humani Generis Progressus
Ex Communi Omnium Labore Ortus,
Uniuscujusque Industriæ Debet Esse Finis:
Hoc Adjuvando,
Dei Opt: Max: Voluntatem Exsequimur."

January 7th, 1852.

LECTURE VI.

ON

SUBSTANCES USED AS FOOD, ILLUSTRATED BY THE GREAT EXHIBITION.

BY

JOHN LINDLEY, Ph.D., F.R.S.

PROFESSOR OF BOTANY IN UNIVERSITY COLLEGE, LONDON.

JOHN LINDLEY, Ph.D., F.R.S.

ON

SUBSTANCES USED AS FOOD, ILLUSTRATED BY THE GREAT EXHIBITION.

HAVING been requested to bring before the Society of Arts some of those general results to which the late Great Exhibition of all Nations has led, so far as alimentary substances are concerned, I have found myself in this position:—that between seven thousand and eight thousand objects having come under the cognizance of the Jury appointed to consider such matters, it is impossible that anything which I can have to say should be otherwise than either an exceedingly brief catalogue of such productions, or else a selection of some of the main points which would appear to be most deserving of notice.

But it is clear that among so large a mass of materials there must be a great deal that is familiar to us all, and that, in fact, it is desirable on this occasion that my remarks should be limited to some of the more unusual subjects exhibited; because food does not stand in the same relation to us as other branches of knowledge, inas-

much as all are obliged to make themselves very much acquainted with what we do or can exist upon.

Allow me, therefore, without further preface, to proceed at once,—dismissing all such questions as those of sea-slugs, and birds'-nests, and other curious matters, which, whatever may be their value, belong to countries so far removed from us that we cannot feel their importance—to point out in what cases it has been found that this Exhibition has brought us acquainted with new preparations or with new sources of supply, new countries, from which different kinds of food well known in their ordinary states can be obtained, or such manifest improvements in alimentary substances as merit especial notice.

If we take the subject of WHEAT, which, perhaps, will be regarded by many as paramount to all others, I think it will appear that there are some circumstances connected with this Exhibition which particularly deserve to be brought under public consideration, and especially one which, although the cornfactors in Mark Lane are familiar with it, is by no means a matter of universal notoriety—the high character and excellence of the wheat that comes to us from our South Australian colonies. There is now before us a sample of wheat from Adelaide, for which we are indebted to the kindness of Messrs. Heath and Burrows, which is, probably, the most beautiful specimen of corn that has ever been brought to market in any country. It is a white wheat, in which every grain appears to be like every other grain—plump, clear-skinned, dry, and heavy, weighing, what may seem incredible to those who are only accustomed to common wheat,

seventy pounds a bushel. And it appears that Adelaide is capable of yielding vast quantities of corn of this description, which takes the lead in the markets of this country over all other white wheats.

It is very true that from Spain there has come a similar kind of wheat, of great excellence also, as is seen by this beautiful sample from Castile, from the mayor of Medina del Campo, the weight of which is unknown, and not easy to estimate, because it is not a clean sample. This is certainly of great excellence also; but, independently of its being the produce of a foreign country, it is almost inaccessible to us, and, therefore, a matter of curiosity more than of practical value, because, owing to the difficulty of transport, it cannot at present come into the markets of this kingdom. If it could, considering that it sells in Old Castile at twenty-four shillings a quarter, it is not easy to say what might be the effect upon the English market of the introduction of any large quantity of it. We find, moreover, that similar quantities of wheat, growing in the same rich country of Spain, are vendible at much lower rates.

I have already said, that among the wheats produced in the Exhibition, that from our South Australian colonies is the best—that it is much the best. And here let me make a remark on that subject. It has been supposed that all we have to do in this country, in order to obtain on our English farms wheat of the same quality as this magnificent Australian corn, is to procure the seed and sow it here. There cannot be a greater mistake. The wheat of Australia is no peculiar kind of wheat; it

has no peculiar constitutional characteristics by which it may be in any way distinguished from wheat cultivated in this country; it is not essentially different from the fine wheat which Prince Albert sent to the Exhibition, or from others which we grow or sell. Its quality is owing to local conditions, that is to say, to the peculiar temperature, the brilliant light, the soil, and those other circumstances which characterise the climate of South Australia, in which it is produced; and, therefore, there would be no advantage gained by introducing this wheat for the purpose of sowing it here. Its value consists in what it is in South Australia, not in what it would become in England. In reality, the experiment of growing such corn has been tried. I myself obtained it some years since for the purpose of experiment, and the result was a very inferior description of corn, by no means so good as the kinds generally cultivated with us. And Messrs. Heath and Burrows, in a letter which I have received from them this morning, make the same remark. They say, "For seed purposes it has been found not at all to answer in England, the crop therefrom being ugly, coarse, and bearded." The truth is, as was just observed, the peculiarities of South Australian wheat are not constitutional, but are derived from climate and soil. It appears, therefore, that wheat may be affected by climate, independently of its constitutional peculiarities: but it does not follow that wheat is not subject to constitutional peculiarities like other plants. There are some kinds of wheat which, do what you may with them, will retain a certain quality, varying but slightly with the circumstances under which

they are produced; as, for example, is proved by some samples here, especially of Revitt wheat, of a very fine description, exhibited in the building by Mr. Payne, and which is greatly superior to the ordinary kinds of Revitt that appear at market. This clearly shows that Revitt wheat of a certain kind and quality is better than Revitt wheat of a different kind, both being produced in this country; so that, circumstances being equal, we have a different result, owing to some constitutional peculiarity of race. To other examples of the kind I cannot at present refer, because time will not permit me to dwell upon such points.

But this leads to a question which I think of the highest interest, and one which has been more distinctly brought out in the Exhibition that has just closed than it has ever been before. We all know the EFFECT OF HYBRIDIZING, or crossing the races of animals; and we also know that, within certain limits, this may be done in the vegetable kingdom. We are all aware that our gardeners are skilful in preparing by such means those different varieties of beautiful flowers and admirable fruits which have become common in all the more civilized parts of Europe; but no one has paid much attention to the point as regards cereal crops. Yet it is to be supposed, that if you can double the size of a turnip, or if you can double the size of a rose, or produce a hardy race of any kind from one that is tender, or the reverse, in the case of ordinary plants, you should be able to produce the same effect when operating on cereal crops. It so happens, however, that the experiment has not been tried except on the most limited scale, and to what extent it

may be carried has been more brought out in this Exhibition than it ever was before. In the last treatise on this subject by Dr. Gærtner, a German writer, who has collected all the information it was possible to procure relating to the production of hybrids in the vegetable kingdom, the author declares that, as to experiments on cereal plants, they can hardly be said to have had any existence. The Exhibition has, nevertheless, shown us that they have been made, and some examples will tell with what result. I have no very good means here of explaining such experiments, but I must advert to them, because they prove distinctly that you may operate upon the constitutional peculiarities of wheat, just as you may upon those peculiarities in any other plant. For instance, Mr. Raynbird, of Laverstoke, who obtained in 1848 a gold medal from the Highland Society for experiments of the kind, sent to the Exhibition this box, which contains a bunch of Hopetown wheat, a white variety, and a bunch of Piper's Thickset wheat, which is red. The latter is coarse, and short strawed, and liable to mildew, but very productive. Mr. Raynbird desired to know what would be the result of crossing it with the Hopetown wheat, and the result is now before us in the form of four hybrids, obtained from those varieties. If you will take the trouble to examine them, you will see that beyond all doubt the new races thus obtained are intermediate between the two parents—the ears are shorter than in the Hopetown, and longer than in the Thickset wheat; in short, there is an intermediate condition plainly perceptible in them throughout. And it appears from the statement of Mr. Raynbird

that these hybrid wheats, which are now cultivated in this country, have succeeded to a satisfactory extent, yielding forty bushels an acre. But in this instance, as in some others which I am about to mention, I do not at all attach importance to that circumstance. The essential part of the question is not the number of bushels produced per acre, but to show that you may affect the quality of cereal crops as you may affect animals and other plants. Mr. Maund, a very intelligent gentleman residing at Bromsgrove, in Warwickshire, has done much more than Mr. Raynbird, for he has obtained a greater variety of results, which he exhibits this evening. Mr. Maund has been occupied for some years past in the endeavour to ascertain whether something like an important result cannot be produced upon wheat by muling, and he exhibited the specimens before us in evidence of what may be done. You will observe that sometimes his hybrids are apparently very good, and sometimes worse than the parents, as we know is always the case. When you hybridize one plant with another, you cannot ascertain beforehand with certainty what the exact result will be: but you take the chance of it, knowing very well that out of a number of plants thus obtained some will be of an improved quality. If you examine this glass case you will at once see the results obtained by Mr. Maund. In each instance the male parent is on the left hand, the female on the right, and the third specimen shows the result of combining the two kinds; a better illustration could not be desired. Here is a hybrid considerably larger than the parents, and in the next instance one considerably shorter and stouter.

In another example you see a very coarse variety gained between two apparently fine varieties; that is, perhaps, a case of deterioration. In another instance you have a vigorous wheat on the left, and a feeble one on the right, while one, much more vigorous than either, is the result. On the other hand we have some anomalous cases, in which the effect of hybridizing has been to impair quality. Now, I think this is a very important case, well made out, because the moment you show that by mixing corn, as you mix other things, you obtain corresponding results, there is no reason to doubt that an ingenious person, occupying himself with such matters, will arrive at the same improvements in regard to varieties of corn as have already been obtained in the animal kingdom, and in those parts of the vegetable kingdom which have been so dealt with.

Wheat has been taken first, because it is the most important of all articles of food; and I should have been able, had it been possible, to have spent the whole hour in pointing out more points of considerable interest on the same subject. But other matters demand attention.

Fecula is, as is well known, a granular matter, found in the interior of plants, and peculiar to the vegetable kingdom. It exists in all plants. Pure fecula is separated by art from a great variety of species, where it is placed in unusual abundance for purposes connected with the wants of the plants which contain it. Before us to-night are examples of it, one being an entirely new, and another a somewhat novel, source of fecula; we have here, in fact, a kind of Arrow-root, not of bad quality, but very good and pure, and probably for dietetical purposes as useful as

the arrow-root of Bermuda. Although not quite new, it is very little known, and is obtained from the stems on the table of a plant which the people of St. Domingo call *Guayiga*. There is no reason, perhaps, to suppose that it will be of importance in our commerce with St. Domingo; but what is curious with regard to it is, that there is a sample of the same substance obtained from a similar source in Western Australia, where they have a plant called *Zamia Australis*, growing abundantly, and yielding even better fecula than the Guayiga of St. Domingo. In both instances, it will be found that this fecula hangs together in chains, quite unlike the ordinary appearance of arrow-root; as is clearly seen under the microscope. Thus we have the arrow-root of Western Australia, and another fecula of the same kind obtained from a species of Zamia, which is found growing wild in St. Domingo—both of them sources which had been previously unknown or scarcely attended to.

There is another very curious substance, for specimens of which we are indebted to the kindness of Sir William Hooker, who has sent it from the important museum belonging to the gardens at Kew. These are cakes of TYPHA BREAD—this from Scinde, that from New Zealand—where they are articles of food, prepared from the pollen of the common reed-mace, or bulrush of those countries. The one which is from Scinde, and which is called there *boor* or *booree*, is made from the pollen of the flowers of the *typha elephantina*, or elephants' grass, of the country. The other, which is called *punga-punga*, by the people of New Zealand, is obtained from another species

of bulrush, called *typha utilis*. I believe these are the only cases known of the pollen of plants being used for food under any circumstances whatever; and it is not a little curious that countries so far apart as Scinde and New Zealand should have the same most unusual kind of diet. It is also interesting to know that the value attached to this as an article of food is not imaginary: for it appears from the researches of chemists that the pollen of plants contains an azotized matter, which, mixed with the starch existing in pollen in great quantities, and with other matters, will give a real nutritive value to this curious substance. Whether there is on record, in the history of ancient times, anything concerning food made from the flowers of bulrushes, I do not know, but this is certain, that the bulrush from Scinde, which yields the cakes standing yonder, is probably the same as that from which the basket was made in which the infant Moses was placed: for to this day, in Scinde, bulrushes are woven into baskets, of the very same nature as we may suppose them to have been in the days of Moses.

Passing by similar matters of curiosity, I may just refer to an odd-looking lump of what is, nevertheless, an admirable substance. That bag of leaves contains some DRIED PLANTAINS, which were sent to the Exhibition. It is not to be forgotten, that in this house the first notice was taken of the dried plantains of Mexico. In Mexico, such articles, in a dried state, enter largely into the consumption of the people in the mining districts. Dried plantains possess considerable nutritive value, and are at the same time exceedingly agreeable to the palate, while

they are cheap and easy to prepare. But what I would more especially mention in respect to them is, that the plantains which lie there, perfectly sweet, and having undergone no material change whatever up to the present time, were sent into a baggage-warehouse at Woolwich in the year 1835, and had there been lying till they were transferred to the Exhibition building. So that it appears that dried plantains are not only exceedingly good to eat, and highly nutritive, but have the property, which many such substances do not possess, of keeping for a very long time,—a fact that should interest those who deal in figs, and similar articles, which are apt to become mity, and dry, and to spoil, to the loss of those who own them. It is certain that there is no good property belonging to the fig which does not also belong to the dried plantain. It appears from the statements of Colonel Colquhoun, to whom we owe our knowledge of the preparation, that such dried plantains can be prepared in Mexico and sold in Europe for threepence a pound, allowing ten per cent profit, supposing there is no duty on their import.

These are minor matters. Let me now call attention to the subject of preserved provisions.

In the first place, the Exhibition contained some examples of DRIED VEGETABLES, prepared by what is called Masson's process. Yonder are specimens, lying to the right of the Chairman. They have been packed in tin-foil, and very imperfectly secured; so that although they are still undergoing no change whatever, yet they are not seen under favourable circumstances; they have been affected, though not injuriously, by the dampness of the building

in which they have been kept. The samples consist of white and red cabbages, turnips, Brussels sprouts, and various other things. As to the method of preserving them, it appears to be free from all objection. First, it is very cheap; secondly, as we are led to believe by persons in France who are well informed on the subject, it perfectly answers the purpose. The mode of preparing these vegetables is shortly as follows: they are dried at a certain temperature (from 104° to 118°), which is neither so low as to cause them to dry slowly nor so high as to cause them to dry too quickly; if the last happens they acquire a burnt taste, which destroys their quality. They lose from 87 to 89 per cent of their water, or seven-eighths of their original weight; after which they are forcibly pressed into cakes, and are ready for use. I saw, a year ago, the original of a letter from the captain of the Astrolabe, a French vessel of war, speaking in the highest terms of the supply of these vegetables for the use of that vessel during her voyage: the French navy generally mentions them in the most favourable terms, and no reason appears for doubting such statements. The specimens before you are, I repeat, seen under unfavourable circumstances. They ought to have been kept in tin and protected from the air; instead of which, they have been lying about more than nine months in the Exhibition building, where they have been exposed to considerable dampness. Yet they are not injuriously affected, although they are absorbing moisture, as must necessarily happen in a damp place, and which, if it were to continue, would spoil them. Now, I think this is a matter of more consequence than it may appear to be,

for the following reason: it is usual to supply the navy with preserved food of different kinds; and I am informed by a distinguished officer of the Antarctic expedition under Sir James Ross, that although all the preserved meats used on that occasion were excellent, and there was not the slightest ground for any complaint of their quality, yet the crew became tired of the meat, but were never tired of the vegetables. This should show us that it is not sufficient to supply ships' crews with preserved meat, but that they should be supplied with vegetables also, the means of doing which is now afforded.

I have only a word or two to say about M. Brocchièri's scheme. Those who are acquainted with this proposal will remember that cakes and other articles of food made from blood were exhibited in the building. In some cases those cakes have undergone no change, in others they became putrid. The object of M. Brocchièri was to utilize the blood of animals in abattoirs. Now, as we are led to believe that abattoirs will be constructed in London, it is an important question whether the blood of the numerous animals there killed can be utilized or not. M. Brocchièri thought it could; and by some unknown method he separated the serum from the crassamentum, and obtained a hard, dry substance, the nature of which I can scarcely describe: it was perfectly insipid, and with nothing disagreeable about it whatever. Perhaps it was like very dry black bread, or something of that sort. If the name had not been unfortunate, people would have looked at it with more interest. It is a question, however, whether it is desirable thus to utilize the blood collected in

abattoirs, or whether it may not be better to let it go into the refuse, to be employed as manure; for it appears from the best evidence that can be obtained, that blood is admirably adapted for that purpose. It is proved that, supposing unmanured land will yield threefold, then land manured with bullocks' blood will yield fourteen fold; therefore we have direct evidence that the blood of animals has a very powerful action as manure; and it may be more profitable to obtain our food from it in that indirect manner than to use blood-cakes prepared after M. Brocchièri's method.

Preserved Meats are out of favour just now. We hear of little except condemned canisters, which the Admiralty unfortunately have in store. It is the more proper, then, to state, that the evidence before the Jury went to show that it is possible to preserve meat in canisters without undergoing any change, for a great length of time. We had hashed beef, which was excellent, dating back to 1836; we had boiled beef fifteen years old, preserved in canisters, and many other specimens, none of which were changed. It is clear, therefore, that the canister-process of preserving is good, provided you keep a sharp eye on the contractors, and upon those who act under them.

What is more important than all other preserved provisions, is the article to which I must next request attention. A great deal of interest was excited when the contents of the Exhibition first became known,—and it did not diminish afterwards,—by a certain Meat-Biscuit, introduced among the American exhibitions from Texas, by Mr. Gail Borden. We were told that its nutritive properties were of a very high order; it was said that ten

pounds weight of it would be sufficient for the subsistence of an active man for thirty days,—that it had been used in the American navy, and had been found to sustain the strength of the men to whom it had been given in a remarkable degree. Statements were made to us, which have since been corroborated, that it would keep perfectly well without change, under disadvantageous circumstances. Colonel Sumner, an officer in the United States Dragoons, who had seen it used during field operations, says he is sure he could live upon it for months, and retain his health and strength. The inventor, he says, names five ounces a-day as the quantity for the support of a man; but he (Colonel Sumner) could not use more than four ounces, made into soup, with nothing whatever added to it. The substance of these statements may be said to amount to this, that Borden's Meat-Biscuit is a material not liable to undergo change, is very light, very portable, and extremely nutritious. A specimen, placed in the hands of Dr. Playfair for examination, was reported by him to contain 32 per cent of flesh-forming principles; for it is a composition of meat,—the essence of meat, and the finest kind of flour. Dr. Playfair stated that the starch was unchanged, that, consequently, there could have been no putrescence in the meat employed in its preparation, and that the biscuit was "in all respects excellent." It was tasted,—I tasted it,—the Jury and others tasted it; and we all found nothing in it which the most fastidious person could complain of: it required salt, or some other condiment, as all these preparations do, to make them

savoury. This meat-biscuit, as I said just now, was reported to be capable of keeping well,—and this might well be true,—because no foreign matter had been introduced into its composition; there was no salt to absorb moisture, and nothing else to interfere with the property of flour, or of essence of meat. These biscuits are prepared by boiling down the best fresh beef that can be procured in Texas, and mixing it in certain proportions with the finest flour that can be there obtained; it is stated that the essence of five pounds of good meat is estimated to be contained in one pound of biscuit. That it is a material of the highest value there can be no doubt: to what extent its value may go, nothing but time can decide; but I think I am justified in looking upon it as one of the most important substances which this Exhibition has brought to our knowledge. When we consider that by this method, in such places as Buenos Ayres, animals which are there of little or no value, instead of being destroyed, as they often are, for their bones, may be boiled down, and mixed with the flour which all such countries produce, and so converted into a substance of such durability that it may be preserved with the greatest ease, and sent to distant countries, it seems as if a new means of subsistence was actually offered to us. Take the Argentine Republic,—take Australia, and consider what they do with their meat there in times of drought, when they cannot get rid of it whilst it is fresh,—they may boil it down, and mix the essence with flour (and we know they have the finest in the world), and so prepare a substance that

can be preserved for times when food is not so plentiful, or sent to countries where it is always more difficult to procure food. Is not this a very great gain ?*

Concerning other matters I must necessarily be more brief. I can say little regarding coffee and cocoa;—there was not, in fact, in the Exhibition much that deserved notice: but there was one sample (and I am sorry to say I have not a specimen here) which ought to be mentioned most especially; namely, the Cocoa of admirable quality which comes, or which may come, from Trinidad. Cocoa —or cacao, as we should call it—is an article of very large consumption. Enormous quantities of it are now used in the navy; and every one knows how much it is employed daily in private life. It is, moreover, the basis of chocolate. But we have the evidence of one of the most skilful brokers in London, who has had forty years' experience to enable him to speak to the fact,—that we never get good cocoa in this country. The consequence is, that all the best chocolate is made in Spain, in France, and in countries where the fine description of cocoa goes. We get here a cocoa which is unripe, flinty, and bitter, having undergone changes that cause it to bear a very low price in the market. But it comes from British possessions, and is, therefore, sold here subject to a duty of only 18*s.* 8*d.* per cwt., whereas if it came from a foreign country it would pay 56*s.* The differential duty drives the best cocoa out of the English market. Still it appears that we might supply, from our own colonies, this

* The agency for the sale of meat-biscuit in this country is 2 St. Peter's Alley, Cornhill.

very cocoa; because, as I have said, there was exhibited, from Trinidad, a very beautiful sample, quite equal to anything produced in the best markets of the Magdalena, of Socomusco, or of other places on the Spanish Main. It had no bitterness—no flintiness—no damaged grains in it; but all were plump and ripe, as if they had been picked. The cocoa from the Spanish Main goes into other countries, for the preparation of that delicious chocolate which we buy of them. It is thrown out of our market by the differential duty. But it is their own fault if our own colonies do not produce fine cocoa, as Trinidad has conclusively proved.

I may here notice a curiosity of a similar nature. Dr. Gardner sent to the Exhibition some prepared Coffee Leaves, which he proposes as a substitute for tea; expecting that in the coffee plantations leaves may be gathered and dried, as well as berries. One of the reasons assigned in support of this proposition is, that you obtain from coffee the same alkaloid, *theine*, that you obtain from tea; and it is that alkaloid which gives tea its value as an article of diet. I am afraid, however, it will be a long time before this plan comes into use; for, in the first place, I cannot say that coffee leaves have a very pleasant taste; and, moreover, it is doubtful whether the coffee-tree, stripped of its leaves, will yield any such crop of berries as will compensate for the loss of the leaves themselves.

Another proposition is, that of Mr. Snowden, who points out that coffee consists of two parts, namely, the grain itself, which is good, and the remains of the skin that

belongs to it, and is entangled in the folds of the coffee, which in itself is useless. He, therefore, says, "When you roast your coffee, you should break it up in my manner, and separate this skin or parchment—this useless material—from it, and use only the residue, or pure material." In some bottles on the table are shown the different stages of this process of Mr. Snowden's for preparing the coffee. You have it roasted, in the first place; then, you see it crushed, together with the impurities spoken of; and next, you have the clean coffee with the impurities separated. I do not know whether the expense of the operation corresponds with the advantage to be derived from it; but it is certainly ingenious. It is, however, believed that the parchment in question is a *caput mortuum*, which does neither good nor harm.

Then the Turks sent us an odd material,—a substance they call KINGUEL,—which is a grain, or seed-vessel, employed by them as a substitute for coffee; whether for adulterating or improving its quality they do not tell us. It is unknown in this country as an article of use, and is the seed-vessel of a plant called GUNDELIA.

SUGAR, which may come next after coffee, leads me to one or two important points. It must be allowed that the general exhibition of sugar by no means represented the state of the sugar market; and that there was a great deal of what is generally known, and therefore not worth mentioning to-night. But there was a most curious series shown in the French department, which, for the singular and beautiful illustration it gave of the applica-

tion of science to manufacturing processes, deserves to be particularly noticed. The French make their sugar, as I need not say, from the beet-root; all the home-made sugar which they consume is beet-root sugar. In that manufacture there is a residuum, as there is in sugar made from the sugar-cane—molasses, a brown sweet substance, containing a great deal of sugar which cannot be recovered. The beet-root molasses has this serious fault—it is nauseous, and utterly uneatable, except by pigs. It has a bad, disagreeable smell, and looks like what I am pointing to now [referring to a specimen]. It is, therefore, sold at a very low price, and is generally given to animals. But it occurred to M. Dubranfaut that this molasses might be compelled to give up its sugar; and he invented what is called the barytic process, in order to separate it. To the useless molasses of beet-root he adds hydrate of baryta, which combines with the saccharic acid, or sweet principle, and produces a saccharate, or sucrate of baryta, an insoluble substance. The colouring and other soluble matters are then washed out; and thus from this dark substance, acted upon, in the first instance, by the hydrate of baryta, you obtain a body [producing it], which is perfectly colourless. It is next necessary to get rid of the baryta, it being poisonous; and carbonic acid is used for that purpose. Carbonic acid being introduced, a carbonate of baryta is formed; the baryta goes over to the carbonic acid, and the sugar is left. The sweet fluid is then subjected to clarification, by straining through animal charcoal and sulphate of lime, and becomes a colourless substance, extremely sweet, and per-

fectly free from baryta. Thus is obtained a kind of *eau sucré* from the black, and, I may say, fœtid molasses: the final result is, the recovery of from 35 to 45 per cent of sugar. There are other points about this operation of which I have not time to make mention, and which are the less material now, because such matters may be expected to be more particularly explained in the report of the Jury soon about to be published.

We must be very brief about TEA. Here are some samples of tea partly illustrative of the condition of the tea-manufacture in India, and partly of the state of the tea-trade in China. There was in the Exhibition an extraordinary and most valuable collection of Chinese teas, procured by Mr. Ripley of Canton, and afterwards bought by Mr. Dakin, to which gentleman we are indebted for some of the canisters before you, showing the finest qualities of tea, and certain other matters which I shall mention presently. You will there find examples of what the finest known qualities of tea are, and among them a sample of tea called superfine flowery Pekoe, which cost in China 50*s.* a pound—such being the value which the Chinese place upon it. In this country it can be only a fancy tea, exceedingly delicate, no doubt, but possessing qualities to which we ascribe little importance.

There are also samples of tea from Assam, and others from the Himalaya mountains, concerning which I am anxious, however short the time at my disposal, to say a word. Dr. Royle has been kind enough to send the samples of tea from Assam, which occupy four of the saucers on the table; and two other samples from the

Himalaya mountains, green and black; these represent exceedingly well the state of the manufacture of tea in each country.

First, as to Assam Tea. The history of Assam tea is this:—About the year 1826 a Mr. Scott obtained some information respecting the existence of tea in the province of Assam, one of the warmer districts in the territory of Eastern India. Persons were sent to examine the nature of this tea, and they reported rather favourably of it. A Company was formed, and the plant has been cultivated since that time successfully. But Assam is a jungly country; the tea grows on the banks of rivers; and the temperature is higher than we should expect it to be where good tea is known to be produced. The experiment may be called successful; for if the Company cannot make fine tea, they make an exceedingly good mercantile article: it appears that the tea of Assam, although not of fine quality, is strong, and useful for mixing with tea of inferior strength. Some of that tea has been estimated, by gentlemen who were consulted by the Jury, as bearing the value of from 2*s*. 6*d*. to 3*s*. 6*d*. per pound in the London market. It is extensively consumed, and there is nothing deleterious in it. Its merits are a matter of taste, and it suits those who like to drink tea high flavoured. However, there was little probability of growing really good tea in such a jungly, warm region, because in its native country tea is gathered on the sides of hills, where there is frost in the morning for a great part of the year, and where the trees are ventilated by winds constantly blowing through them, instead of being

in a vale, as in Assam, where mists are more prevalent than clear weather. This led Dr. Royle to recommend an attempt to cultivate tea in the Himalaya mountains, where a similar cold temperature, and circumstances of the same nature as in the tea districts of China, exist. Judging from *à priori* considerations, he was of opinion that tea would succeed completely on the hills of Northern India. He recommended, in 1827, the attempt to Lord Amherst, who was then Governor-general, and afterwards to Lord William Bentinck, who commenced the experiment at his suggestion; and what is the result? In 1847, 162 acres were occupied by tea-plantations on the Himalayas; and at that time the tea was selling at Almora, the green for 9*s*. and 10*s*. a pound, and the black from 4*s*. to 7*s*. But there were also coarse qualities, which were purchased by the people of Bhotan to carry with them across the passes in Thibet and Chinese Tartary—into the very places supplied by the Chinese themselves. It appears from a report which has just been put into my hands on the subject, by Mr. Fortune, who has been employed lately by the East India Company to inquire into this matter, that the quantity of ground now covered is 656 acres of public land, exclusive of all that in the occupation of Zemindars, who are most anxious to form tea-plantations. Here are two samples of this tea, green and black; the best is worth 2*s*. 4*d*. a pound, free of duty. There can be no doubt, therefore, that the experiment has perfectly succeeded; and it has furnished a means of employing the poorer inhabitants of the Himalaya mountains, who have no other way of earning that which

may procure them the comforts, or even the necessaries of life: nor is it at all improbable that a part of the Chinese trade will soon pass from the Chinese themselves to the Europeans in the north of India.

There is among Mr. Dakin's samples another point, which is of a somewhat different nature: You will find there some very fine samples of gunpowder tea and of scented Caper,—the finest the Chinese can make; and near them you will observe some spurious gunpowder and spurious scented Caper tea: the eye cannot perceive a difference between them. Here we have an instance in which the Chinese have succeeded in committing a fraud, which is of a most gigantic nature, as must be admitted when we recollect that 750,000 lbs. weight of such tea were imported into Liverpool a short time ago; and that when the spurious article is mixed with real tea the two cannot be distinguished by any ordinary process. One of these teas is black, and exactly like scented Caper; the other is green, and to the eye is exactly like the finest gunpowder. But *there is no tea in either*, and they offer a very curious instance of the ingenuity of the Chinese in falsifying what they sell—an art for which that nation is notorious, as you must know. This "tea" they call *"lie tea,"* and it is made in the following manner:—The Chinese take a tub, into which they put a quantity of sand and similar substances, pounded leaves, vegetable dust, or anything containing vegetable matter, with apparently some gypsum; this they sprinkle with rice-water. The rice-water, being of a glutinous nature, collects the composition into small balls, which hold together: and by degrees, by

dexterous manipulation, the tub full of this fraudulent material acquires the form of myriads of globules. In the next place, the globules are faced; they are made black with black lead, as Mr. Warrington, an ingenious friend of mine attached to Apothecaries' Hall, has proved by analysis. They face the green with Prussian blue, and probably turmeric; there are two opinions about that: some say the green is a mixture of Prussian blue and chromate of lead; others say that turmeric is used; at all events, there is no tea. You will see by these test-glasses that I have been taking pains to get some tea out of the "lie tea." [Producing an infusion of each.] There is a great deal of dirt, and a great many pieces of leaves at the bottom, and that is all; but there is not a trace of tea in the infusions, and I have employed nothing that could have destroyed the tea leaves, if there had been any present.

I am told that TOBACCO is not alimentary, and ought not be introduced here; but as it was a part of the functions of the Jury to which I had the honour to belong to consider all that related to tobacco, I think the Society of Arts ought not to be left in the dark as to this important question. And in the first place I have to state, without going at all (for there is no time) into the comparative merits of different kinds of tobacco, that certain very curious facts were elicited. It is not to be disputed that the finest tobacco in the world comes, as is generally supposed, from the Havannah; this was demonstrated by the admirably manufactured samples exhibited by the house of Cabañas and Carbajal. But there

is only a limited area in Cuba in which that tobacco is produced; so that whilst the Havannah tobacco may be of excellent quality in general, yet it is only that which comes from a certain part which is much better than any other. Don Ramon de la Sagra, who resided many years in Cuba, and published an important work on that island, has stated that this is undoubtedly the fact,—that the best Havannah tobacco is the produce of a very small area. The consequence is, that this little area is the only place known where the finest kind of tobacco can be produced; and we cannot look even to the Havannah for it with great confidence, inasmuch as it is chiefly used in the island, or as presents, but a limited amount going into general consumption. Yet we found that the tobacco from Trinidad did not appear to be in any way inferior to that from Havannah. Whether or not there exist generally in the island of Trinidad conditions of soil and other conditions favourable for eliciting the admirable qualities which the best description of Havannah tobacco has, I cannot say; but, for my own part, I entertain no doubt whatever that in that part of Trinidad from whence the tobacco came which was exhibited in the building, a kind of leaf quite equal to the best class of Havannah tobacco might be grown. Soil, no doubt; and a variety of circumstances of that kind, have much to do with the quality of tobacco; otherwise we cannot account for the varying qualities of the samples produced from various countries. This is strikingly shown by a remarkable circumstance: some of the best tobacco sent to the Exhibition came from the

Southern Russian provinces; it was fully equal to the best American tobacco, grown in America under favourable circumstances; it was tobacco of the highest class; yet nobody could have expected that such would have been the case with Russian-grown tobacco. The fact, however, proved how much climate and soil have to do with the quality of tobacco, and that the summer climate of some parts of Southern Russia is admirably fitted for the cultivation of this plant.

On the other hand, manufacture exercises a great influence over the quality of tobacco. In Algiers, where the climate is apparently most favourable, the quality is such that nobody could be found to go through the punishment (I must so call it) of smoking an Algerine cigar. Those cigars were not smokable, because they were badly prepared; for Algiers is a country apparently favourable to the growth of the plant, if proper means were taken to prepare the leaves.

Then, again, we found that some English-made cigars are not to be distinguished from Havannah cigars. I would ask any gentleman who has the misfortune [?] to smoke, to examine those cigars made by Lambert and Butler, of Drury Lane, and to tell me whether they are English or foreign,—by the look. They are not distinguishable by external appearance, and I may add, that the method which has been employed in preparing them renders them of very great excellence,—of much greater excellence, in fact, than many of the cigars imported from Havannah, and paying a ten-shilling duty as manufactured tobacco. Now this is a subject of greater importance

than at first sight may appear; for if we can succeed in making cigars of such quality in England, we immediately create a large demand for labour. The preparation of cigars is by hand labour, which no machinery can ever supersede; and when we recollect that in the German Commercial Union, in the year 1842, 605,000,000* of cigars were made, it is not necessary to inquire how much labour was required for that production. But none of the Continental cigars were good, except what came from Portugal;—those of the German Commercial Union were very inferior to the best English-made cigars that were produced; and there is no doubt whatever that it is quite practicable to make cigars in this country which shall be undistinguishable in appearance, and not very distinguishable in flavour, from any except those first-class Havannah cigars which scarcely ever come into consumption. It is a matter of considerable importance to establish that fact, because it may open the way to the employment of poor people, whose physical infirmities render them unfit for harder labour. I need not say that cigar-making is very light work.

With respect to the Portuguese cigars, I have only this remark to make: they were of a very unusual quality. They are, I presume, made in Portugal from foreign tobacco,—perhaps Brazilian. They appear as if they had been high dried. The flavour is unlike that of the best cigars we have, and resembles that of high-dried snuff; they are very pleasant, smoke exceedingly well, are mild, and of excellent flavour; but not of the same flavour as

* 604,898,200 according to official returns.

those we are in the habit of getting in this country. Our cigar-makers will do well to turn their attention to this kind of manufactured tobacco.

About HONEY, I can merely say that there was a great deal of bad, and a great deal that was admirable. We had honey from Hymettus, from Greece, France, Spain, and many other places; but there was among it little that could be called better than the best of that which we are in the habit of consuming; although some was of remarkable excellence.

Of far more importance than honey, the quality of which necessarily depends on the country where it is produced, is the question of HIVES; and I think I ought not to close these remarks without a few observations on so interesting a subject. Bee-hives, it is true, are not food, but they are the means of obtaining food; and they came under the consideration of the Jury to which I had the honour to belong.

We found a great quantity of hives, which were generally remarkable for being unsuited to the insects that were to inhabit them. Bees require, above all things, to be left alone; to be perfectly tranquil; and we found double hives, with one so drawn over the other that you could not take off the outer hive without shaking the inner one. Bees require an atmosphere, sometimes warm and sometimes cool: and we found hives made with ventilating contrivances of pierced zinc, most ingeniously adapted to occupy the time of the bees in filling up the holes when they do not want them, and opening them again when they do. Bees require ready access to their

hive in summer, and the means of closing up the access in winter; we found hives made with openings so narrow, and the access so small, that not more than two bees could enter at a time. Bees have enemies to contend with,—mice and snails,—tom-tits pop their heads in when they can, and carry the bees off; we found hives apparently contrived for no purpose except to let mice and such creatures in. Bees require an equal temperature,—not over hot in summer, and not over cold in winter; we found hives made of metal plates. I had the curiosity to write to a person who had used one of these hives, of great, even royal, pretensions, to inquire what had become of his bees; his answer was, "They have all perished or flown away!" It is known that angles in the interior of hives are exceedingly disadvantageous; because it is in the angles that the wax-moth, the greatest enemy to bees, makes a lodgment: we found hives extremely angular; hives, indeed, provided with angles multiplied with singular pains. In short, we saw nothing to commend or to admire in the hives exhibited (I speak of the English hives) excepting one small improvement, which is here. It is a small matter, but it is a real excellence in construction as well as in the present mode of putting a top on hives. In general form this hive is very like a common hive, but it is admirably made of straw of considerable thickness. It is not a truncated cone, as all hives to carry glasses are, but is more like a hemisphere, with a flat board put upon the top. The hemispherical form is that best adapted to prevent the inroads of wax-moths. There is also something peculiar in the form of it; you

will observe, that it is rather less in diameter at the bottom than it is a little higher up, by which means the comb is kept firm. Altogether it appeared to be a hive deserving favourable notice. It was exhibited by Mr. Milton, of Marylebone Street, the most skilful of our apiarians. If that were not known, his book on bees would sufficiently show that he deserves to be thus spoken of.*

The facts thus brought under your notice seem to show, that so far as the subject of food is concerned, the late Exhibition has brought into view many points of considerable importance. It has shown that our Australian colonies furnish the best wheat in the world, Spain not excepted. It has shown that the quality of wheat may be improved to an unknown extent by those processes which have been applied to other parts of the animated world with the best results, but which have not been applied to cereal crops. It has shown that there are means by which vegetable and animal provisions may be preserved with certainty, and without risk of deterioration, for a greater length of time than any kind of service can require. It has shown that if we are condemned to bad cocoa and to bad chocolate,—if our chocolate-makers cannot compete with France and Spain, and other countries, it is less because of our differential duties than on account of the supineness of English colonists, who look to differential duties as a cloak for their own slovenly culture. It has shown that the tea of the Himalaya is becoming an important article

* This kind of hive, without the top, was first proposed by Butler, in his admirable "Historie of Bees," published in 1623, chap. iii.

of trade, rendering it impossible to doubt, from the evidence we already possess, that the tea grown in the north of India will soon enter into competition with that of China. It has shown that we may obtain, from our own island of Trinidad, tobacco fit to be compared with the most renowned of the Havannah; and that we may not only make better cigars at home than any made on the continent of Europe, but very much better than many which come from America itself. The Great Exhibition has, in short, demonstrated, that although new kinds of food are not to be expected (and it seems hopeless to look for them), yet that means exist of materially improving both the quality of what we have, and the mode of its preparation; and, moreover, that we need not despair of discovering still other sources from which some of the articles we now use may be more abundantly and economically obtained than is the case at present.

LECTURE VII.

THE VEGETABLE SUBSTANCES USED IN THE ARTS AND MANUFACTURES, IN RELATION TO COMMERCE GENERALLY.

BY

PROFESSOR EDWARD SOLLY, F.R.S.

PROFESSOR EDWARD SOLLY, F.R.S.

ON

THE VEGETABLE SUBSTANCES USED IN THE ARTS AND MANUFACTURES.

In undertaking to describe to you the probable influence of the Great Exhibition on the cultivation and preparation of vegetable raw produce, I feel that I have attempted a task of some difficulty. The subject is a very important and a very extensive one, forming, as it were, the very groundwork and foundation of commerce, manufactures, and, I may say, indeed, of national prosperity. To attempt to enter into the consideration of the whole subject, and to follow out one by one the various branches into which it naturally divides itself, would occupy many lectures instead of one; and I shall therefore content myself with rather trying to place before you such generalizations as have occurred to me during the course of my labours in the Jury, and select as illustrations a few of the more important of the many subjects which have been under our consideration.

In using the term "raw produce," it must be borne in mind that it is not to be confined to those substances, which

in their crude and natural condition form articles of commerce; but rather to those vegetable materials, whether crude or partly manufactured, which constitute the basis of the arts and manufactures, the crude matter on which the manufacturer exerts his skill, and which it is the especial object of his art to render fit for some new and useful purpose. It is in the state in which he obtains it; and it is, therefore, truly speaking, the raw material of his art, although, at the same time, it may really have undergone a long series of preliminary processes and operations.

At the very outset of our inquiries, and in our very first attempt to draw general conclusions respecting the vegetable elements of commerce, we are met by one or two serious difficulties, which, whilst they tend to make our study more laborious and uncertain, at the same time teach us to be cautious and diffident, lest in our wish to draw general deductions, and arrive at first principles, we fall into the very common error of arguing on false or insufficient data.

If the Great Exhibition had really contained specimens of all the principal raw produce of each different country, though it would, no doubt, have been difficult to compare them together, from the fact of their being dispersed and scattered over so large a space, yet we should then, at least, have had the means of making a fair estimate of the relative powers of production of each country. This, however, unfortunately, was not the case: some countries were well represented, some indifferently, and some but very badly; and hence it is necessary in imagination to try and supply these deficiencies, before we can fairly

reason on the whole as complete. In spite of all caution, however, it is probable, that the effects which the Great Exhibition will really lead to, will differ as widely from those which it *might* produce, as the Exhibition itself, in fact, differed from what it might have been. Taken in a broad sense, the Exhibition must be regarded as a great practical expression of the state and condition of human industry, as an indication of the degree of advancement to which it has arrived, and the changes which it is undergoing. As regards the future, then, we have to consider, What changes and improvements may we look forward to? and how will those changes and alterations be influenced by the Great Exhibition?

Even a slight examination of the raw produce which forms the chief basis of our manufactures, must lead us to the conclusion that, in many cases, the best substances are not used, nor are the best modes of preparing them followed. The history of every art gives us plenty of illustrations to show what apparently trifling circumstances have led to the use of some particular substance, and how long it has been before that substance has given way on the introduction of a new material, even though the new material was confessedly superior to that previously in use. The cause of this has, no doubt, in part been the tenacity with which men in all cases cling to old customs and practices, and the cautious disinclination which prudent men generally have to enter into a new process; whilst in many cases it has certainly arisen from a combination of

those in trade, determined to prevent any alteration, or the introduction of any new substance. But, at the same time, there is no doubt that ignorance on the part of the manufacturer of what was his true interest, has been at the very foundation of this opposition to change.

If you were to place before any manufacturer specimens of all the substances which could be employed in his particular manufacture, and if you could tell him from whence each could be procured, its cost, the quantities in which he might obtain it, and its physical and chemical properties, he would soon be able to select for himself the one best suited for his purposes. This, however, has never happened in relation to any one art; in every case manufacturers have had to make the best of the materials which chance or accident has brought before them. It is strange and startling, but nevertheless perfectly true, that even at the present time there are many excellent and abundant productions of nature, with which not only our manufacturers, but, in some instances, even our men of science, are wholly unacquainted. There is not a single book published which gives even tolerably complete information on any one of the different classes of vegetable raw produce at present under our consideration.

The truth of these remarks will be felt strongly by any one who takes the trouble to examine any of these great divisions of raw materials. He will obtain tolerably complete information respecting most of those substances which are known in trade and commerce; but of the greater number of those not known to the broker, he will learn little or nothing. Men of science, for the most part, look

down upon such knowledge. The practical uses of any substance, the wants and difficulties of the manufacturer, are regarded as mere trade questions, vulgar and low—simple questions of money. On the other hand, mere men of business do not feel the want of such knowledge, because, in the first place, they are ignorant of its existence, and secondly, because they do not see how it could aid them in their business; and if it should happen that an enterprising manufacturer desires to learn something of the cultivation and production of the raw material with which he works, he generally finds it quite impossible to obtain any really sound and useful information. In such cases, if he is a man of energy and of capital, he often is at the cost of sending out a properly qualified person to some distant part of the globe, to learn for him those practical details which he desires to know. This is no uncommon thing; and many cases might be stated, showing the great advantages which have arisen to those who have thus gained a march upon their neighbours.

This want of knowledge, arising as it does from a want of communication between the first producer and the manufacturing consumer, is the great cause why some of our manufactures advance so slowly, and why some branches of commerce are in so depressed a state. A moment's consideration will suffice to show the bearing of this fact. Let us take the case of a gum, a resin, or a vegetable extract, collected by a native in the vast forests of Hindostan, and used by the calico-printer of Manchester: what connexion have these two with each other? and what knowledge has the former of the purposes to which it is to

be applied, or the latter of the sources whence it is derived? The native collector sells the raw produce to the native buyer or broker, having generally taken care to adulterate it to a greater or less extent; the native broker sells it again to the merchant; the merchant consigns it to a house in England; and the English house employs their broker to introduce it to the manufacturer. Perhaps the article, from careless collection or from intentional adulteration, is greatly depreciated in value; still the manufacturer must use it, for he cannot get any better: he consults his broker, and learns that it is the best in the market, and that it always comes over in that state. So matters go on from generation to generation; and for want of a little knowledge, rightly applied, all parties persevere in a system which, whilst it invariably increases labour, at the same time certainly diminishes profit.

It would lead me too far from the subject now under our consideration, were I to consider the effects produced in trade by these "middlemen" and intermediate agents. I would now, therefore, only point out to you the effect which they produce in retarding the spread of knowledge. No doubt, such a system has its advantages, as well as its objections; that it tends to keep up the old rule-of-thumb mode of going on, there is likewise no doubt; and also, that with all its faults, and the inconveniences which it causes to manufacturers, they would be very sorry to see it in any way changed. It sometimes happens that a merchant rashly endeavours to set aside the old prejudice, and presumes to bring his goods directly to the manufacturer; if he does so, he is generally eyed with distrust

and suspicion, and is told, as I have not unfrequently myself heard, "Really we cannot entertain the thing in this form; you had better send it to us in the ordinary way, through a broker." I do not for a moment mean to say that this may not be the most business-like mode of proceeding; my object merely is to point out how this system tends to check improvement, and how the manufacturers, though they suffer from its effects, cherish and combine to uphold it. It may be taken as a pretty well-ascertained fact, that only those manufactures are in a really progressive state, of which the producer of the raw material and the manufacturing consumer are in more or less direct communication, and where there is a mutual knowledge of the capabilities of the one, and the requirements of the other. When there are many intermediate agents between the two, it is long before the complaints of the manufacturer reach the ears of the first producer, and it must be many years before the improvement which the former desires can be brought about.

Such a system of trade offers no facilities for the introduction of new kinds of vegetable raw produce; a new substance, like a new process, is looked on with distrust. It "is not in the market;" the broker does not know it, and that is nearly the same as pronouncing it of no value: it is put up to auction, sold for a tenth part of its value, and what becomes of it is a mere chance. Sometimes it falls into the hands of clever and enterprising men, a demand for it rapidly arises, and it is then afterwards brought to market; but more frequently it is thrown aside as useless, because no pains are taken to apply it in the

right manner, and in a couple of years it is altogether forgotten, or if remembered, it is as a worthless thing which was tried some years since, and found of no use; and, lastly, the report goes back to the country from which it was brought, that it is of no value in the European markets.

As I have already said, the Great Exhibition presented to us a most valuable and interesting collection of the gums, resins, oils, dye-stuffs, fibres, and timber of many countries; necessarily far from complete, but still highly useful, because along with those substances well known to our manufacturers, there were samples of many which are wholly unknown, and not a few of those, which having been brought over in former years, and condemned and discarded in the manner just alluded to, are now beginning to excite attention, and are likely in time to become articles of commerce. This department of the Exhibition possesses one peculiar advantage, namely, that it is not merely a record of the successes, but also, to some extent likewise, of the failures, of past years; and there are many cases in which failures are even more instructive than successes. In examining these forgotten materials, we are naturally led to inquire into the reasons why they met with so little favour; we are induced to study the modes in which they were tried, and the causes which led to the failure of their employment. If these inquiries teach us the reason why former attempts failed, they may very probably suggest new modes of working, better suited to the properties and

peculiar characters of each substance; or, indeed, they may perhaps lead to altogether new uses and new applications.

Gums and Resins.

On examining the collection of gums and resins in the Great Exhibition, it is impossible not to be struck with the number and variety of these substances shown, all imperfect though the series was; and also with the fact, that many of the finest and best are not at all used in the arts, whilst many of the inferior ones are. Now, there is no doubt that if these manufacturers who use gums and resins were well acquainted with the better sorts, they would soon learn to discard the inferior varieties. I might mention, for example, the fine red resin of the Xanthorrhœa of New South Wales, which, though it has been known in our Museums for more than half a century, is only now beginning to be used by manufacturers, and which will unquestionably ere long increase in estimation and demand. In a similar condition stand the beautiful Cowrie resin of New Zealand, the East Indian Dammers, and the fine hard resins from Coorg. These resins all require a peculiar treatment, different from that employed with the ordinary resins of commerce: treated as those substances commonly are, they will be found refractory and useless; but by new processes, and under the influence of different solvents, their real value will in time be developed.

Another point, and one which directly illustrates some of the remarks I have already made, is the great variation

in quality which many of these substances exhibit, resulting from want of care and attention in their collection and preservation. When, for example, we find that a substance imported from India as gum, and intended to be used as a substitute for gum arabic, is the product of at least twenty-four different trees, collected indiscriminately, and, in fact, is a mixture of gums, resins, gum-resins, and impurities of all sorts, it is not difficult to understand why it should be in little esteem, and fetch but a small price in our markets. A small portion of the mixture is excellent, but it is almost rendered useless by the quantity of trash sent with it; to remedy this, it must be carefully handpicked, and that, of course, still further diminishes its value. In the East Indian collection, which was unquestionably the richest and most interesting series in the whole Exhibition; there were several specimens of well-known substances from new localities; amongst these I would mention the shellac from Singapore. It is stated that this important resin may easily be collected in almost unlimited quantities in the neighbouring jungles of the Peninsula. Now the value of shellac varies very greatly, according to the tree from which it is collected, and other circumstances; and the lac brought over is sometimes so inferior as to be of very little use to the manufacturer: if more care is not used in its collection, the trade in it will very probably ere long begin to fall off, as some of the other and less uncertain resins come more into use, and gradually replace it.

In connexion with gums, we must not forget the very excellent artificial gum, which is now so largely made for

the use of calico-printers and others, by roasting starch, and known under the name of "dextrine," or British gum. This manufacture has now been brought to such a degree of perfection, that it leaves little to be desired; it has, of course, diminished the value of natural gums, and increased the importance of the starch series. The manufacture of starch itself has undergone several important changes during the last few years, chiefly due to the application of chemical science. Formerly, starch was almost entirely obtained from wheat and similar grains by fermentation; the cellular matter of the grain was destroyed by fermentation, and the particles of starch were thus liberated: this kind of process was not applicable to rice or maze, and it is only since the introduction of chemical modes of setting free the starch, that those grains have been available as sources of it. By the application of bleaching agents, too, the appearance of the starch has been greatly improved. New plants have been resorted to by the manufacturers of starch; of late years very large quantities of excellent starch have been prepared from sago, the meal of which, in fact, requires very little more than washing and bleaching to render it fit for use.

Caoutchouc.

A century ago caoutchouc or India-rubber was only known as a curiosity—now it is regarded almost as a necessary of life, and of late not a year has gone by without some new and valuable application of this remarkable substance. A few years since, the demand for India-rubber had increased so much, that importers began

anxiously to look out for new sources, especially as the supply from South America was beginning to fall off. A little inquiry showed that abundance of milky-juiced plants, yielding excellent caoutchouc, flourished in the forests of tropical Asia; and from various parts of the East Indian empire, Assam in particular, excellent samples were sent. A trade soon sprang up, and large quantities of caoutchouc were sent over; it was, however, found that the rubber greatly deteriorated in quality, and that the cargoes sent over did not at all correspond in goodness to the first samples; hence it soon acquired a bad name, and a diminished value in the market. The cause of this change was simple enough—the first samples sent over were carefully prepared by intelligent persons, and in the manner which experience had shown to be the best; that which was afterwards imported was prepared in a careless and slovenly manner by the natives, not in the best manner, but simply in that manner which gave the least trouble. It is sad to see in how many instances, for the want of a little care and forethought, the abundant riches of the earth are destroyed, or rendered useless for the purposes of man.

Gutta Percha.

There is very little doubt that there exist many other vegetable substances similar to caoutchouc, which, like it, might be used for various purposes in the arts, but which must remain unknown and unused, till some happy accident shall develope their value to those able to employ them practically. A few years since we witnessed in this

room the introduction of that singular substance, gutta percha, when we awarded our large gold medal to Dr. Montgomerie, for drawing the attention of European artizans to its remarkable and valuable properties. I believe that there are many similar substances which might in the same way be introduced with advantage to the notice of English manufacturers, and which are at present either only known to the natives of the places in which they are produced, or perhaps even altogether unknown. The forests of Asia, Africa, South America, and Australia, are not half examined, and there is no doubt that their investigation would amply repay the trouble. There were several new and peculiar substances of this class shown in the Great Exhibition, but for the present I shall merely mention one, namely, the Cattimundoo, contributed from Vizianagram, a substance possessing many of the properties of gutta percha, and which is certainly likely to become a valuable import.

Oils.

On turning to the great class of vegetable oils, we find the same rich abundance of nature to admire; and here, as in the preceding case, we cannot but wonder at the comparatively small number used by manufacturers, out of the hundreds presented to us by the fruitful earth. It would seem almost, as if in regard to the productions of the earth, there were certain vested rights which might not be set aside, and that we were bound to go on importing and using the same substances which our ancestors did, irrespective of the question, whether other substances

might not be advantageously substituted for them. Of late years attention has been paid to some of the many good vegetable oils of Asia and Africa, and large quantities have been imported; yet there are still many which are quite as good, but almost unknown, though new oils are anxiously desired by candle and soap makers, by wool-spinners, by engineers in general for diminishing friction, and for various other purposes. Cocoa-nut and palm-oil have been extensively imported from Ceylon and the coast of Africa, chiefly for the manufacture of candles; but there are, besides these, at least two dozen other solid vegetable oils, almost unknown to commerce, and well worthy the attention of manufacturers, such as the vegetable tallow of the Vateria indica, the fat of the various Bassias, the oil of the Carapa, the oils of the Garcinia and of the Vernonia, the vegetable tallows of China and the Archipelago Islands. The various vegetable waxes, too, of which there are likewise many, and which may be had largely in Mexico, South Africa, and North America, deserve notice. Some of these substances are already becoming known to manufacturers, especially certain of the kinds of vegetable tallow from China; and the importation of vegetable wax is increasing. Till recently, indeed, the latter substance could not be imported into England, for the high duty imposed upon it amounted to a prohibition. Whilst bees' wax paid a duty of 10*s.* per cwt., vegetable wax was charged 5*l.* 12*s.*, or at the rate of 112*l.* per ton. Recently the duty has been equalized, and the protection which long existed in favour of bees has been withdrawn.

Amongst the fluid fixed oils, similar facts are to be

observed; there are many excellent oils wholly unknown to commerce, but admirably adapted to the wants and requirements of manufacturers; these, too, are waiting for some fortunate circumstance to bring them to the notice of those able to turn them to practical uses. Let us hope that it may not be the devastating and paralysing influence of war which shall give rise to the introduction of these substances! I might mention many curious facts to show how difficult it is to introduce a new article of trade, however good, if in any way it interferes with the established custom and routine of commerce, and how in some cases it can only be brought in under a false name, in order to obtain an entrance into our ports! Till quite recently the linseed oil required for Government use, throughout the Indian empire, was wholly sent out from Europe; and it is only within the last few years that it has been found out that the native-grown linseed is quite as good as the best which can be had from Europe.

In preparing oils for exportation, some care and attention must be paid; when well expressed, oil has little tendency to change, but when prepared in a careless and slovenly manner, contaminated with mucilage and other matters from the seed, it soon becomes rancid, and then will not bear a sea voyage of any length. The value of these new oils, therefore, will mainly depend on the care and skill bestowed upon their preparation: if expressed with rude and imperfect machinery, they will arrive foul, discoloured, rancid, and of little value; whilst, if carefully prepared, they will come over fresh and sweet, and fit for any purpose in the arts to which they may be applied.

Again, in collecting these oils in our colonies and elsewhere, some system must be adopted for the cultivation and preservation of the plants yielding them; the supply cannot fail to be small and uncertain, if the same reckless mode of cutting down trees is adopted, as has been the case with the trees yielding gutta percha and caoutchouc, —a system which, gradually but surely, leads to the extinction of the trees themselves. These remarks may to some seem almost self-evident, but they are nevertheless generally overlooked, and the usual consequences are disappointment, failure, and ruin.

Several of the little known volatile oils were highly interesting; the sweet-scented, fragrant ones are all of value, though their importance in the arts is fast diminishing, as the progress of science brings us nearer and nearer to the mode of preparing them artificially. Amongst these oils several are of value, in consequence of their strong solvent powers over resin. Thus, for example, we have the excellent oil of the *Eucalyptus piperita* and *Leptispermum*, from New South Wales;—that country yielding at the same time valuable resins, and essential oils capable of dissolving them, and thus of rendering them practically useful in the arts.

In connexion with this part of my subject, I would also draw your attention to a class of curious empyreumatic volatile oils, obtained by the destructive distillation of the bark of trees, such as the birch-oil of Russia, used in the manufacture of Russian leather, and from which it derives its well-known fragrant odour, and its power of withstanding the attacks of insects and the progress of

decay. This oil does not appear to be so well known as it deserves; it might probably be used for other purposes besides the preservation of leather; it is possible, likewise, that similar oils might be obtained by the destructive distillation of the bark of other trees.

Dyes.

There is, perhaps, no art which has undergone more important changes and alterations during the last half century than that of dyeing; and here, as in all other branches of applied science, we find many points of interest in studying the vegetable raw products employed, which are, as it were, the ores from which precious metal is to be extracted, by the skill and knowledge of the manufacturer. Some of these changes were shown in a very interesting and instructive way in the Great Exhibition, where we had the rude but efficient dye-stuffs of our ancestors, contrasted with the more elaborate processes, and more refined dyeing materials, of the present day; at the same time, it is impossible not to recognise the eminently progressive character of the art, which we may fairly anticipate will undergo as important changes in the coming half century, as it has experienced during the past. To some extent we may form an estimate of the state to which the art has arisen in each country, by observing the dye-stuffs employed; and, in most cases, where woad, bugloss, and weld, are the chief sources of blue, red, and yellow, we may safely conclude that comparatively little progress has been made in the application of practical science to the art of dyeing.

It would be foreign to our subject at present to enter at all into the operations of the dyer, and I shall, therefore, confine myself to the consideration of the materials of his art, quite independent of the manner in which he employs them. It is obvious that those dye-stuffs which require no preparation, but which, like logwood, fustic, and madder, are yielded by nature in a state fit for immediate use, are under very different circumstances from those which, like indigo, litmus, and annotto, undergo a process of preparation before they are fit for the market. But even in the case of those which seem to require nothing more than the axe of the woodman, very great and important differences are to be observed. Climate, soil, and cultivation, produce the most marked differences in the growth of plants, and consequently also in the production of colouring matters. One illustration of this will perhaps serve as well as many, and will show not only how the production of dyes is regulated by apparently small circumstances, but also how those circumstances may be controlled and modified by the judicious application of science. It was observed that some of the madder grown near Avignon was inferior in the richness and brilliancy of its colour to that produced in other districts; and the proprietors being anxious to discover the cause, were led to institute a chemical examination of the soil of their own land, in comparison with that of some of the best madder farms; the result showed that their soil was deficient in lime, whilst all the others contained it. They were, therefore, induced to give their land a good dressing of lime, and the result fully justified them, for the next

year their crop of madder was inferior to none. The value of all these dye-stuffs depends on the care bestowed on their cultivation, and upon the attention paid to their collection and preservation, so that they may not suffer injury, either from carelessness, or from adulteration. The importance of vegetable colouring matters generally is somewhat diminished by the numerous chemical discoveries which have introduced to the dyer mineral or inorganic substitutes for many of them; but, at the same time, chemical science has so greatly improved most of the processes of dyeing, that the dyer, by means of its aid, is now able to get many colours from the old vegetable dye-stuffs, which were quite out of the power of his predecessors. The improvements in calico-printing, and dyeing in many colours, have gradually given rise to a demand for new colours and new dyes, so that at the present time good or promising new colours are received with a considerable degree of interest. Fortunately, there are many of these, and not a few which may be had in large quantities, and at low prices.

Owing to the progress of the art, many colouring matters which a few years since were regarded as of little or no value, are gradually rising in estimation; when first introduced, they were tried as substitutes for the ordinary dye-stuffs, and were treated in the same way as those dye-stuffs commonly were; the result was far from promising, and they were accordingly condemned. Now, however, new modes of operating are introduced,—the colouring matter is treated in accordance with the known laws of chemistry; and good and useful colours are obtained

from it. Munjeet, Chay root, and many other dye-stuffs, are in this manner gradually coming into use and estimation.

The advancements which have been made in the manufacture of mixed fabrics, call for corresponding changes and improvements in the art of dyeing, and render new modes of dyeing, as well as new dyes, highly desirable. A dye which serves well for wool or cotton, frequently will not take on silk or flax; and, consequently, though it will do very well for any one of these fibres alone, it is of little use for a mixed fabric composed of two different fibres. Amongst some of the little known native dyes of India and other countries, there are many well deserving of careful examination; such, for example, as the black indigo of the Shan country, the black dye of New Zealand, and others.

Dye-stuffs, for the most part, are bulky and heavy substances, the carriage of which for any distance, by land, or even by water, makes a very serious addition to their cost; and, consequently, every mode of increasing the proportion per cent of colouring matter is worthy of consideration; and those modes of preparation are best which yield the largest quantity of colour, and the least quantity of useless fibrous matter. Owing to the judicious manner in which the Chinese safflower is collected, it contains far more of the fine red colouring matter, and is consequently worth four or five times as much in the market, as the best Bengal safflower; in addition to which, from want of due care in the drying, the latter is sometimes so much injured during the sea voyage as to be deteriorated at

least fifty per cent. The loss thus sustained is often set down to "the nature of the drug," and not to the careless habits of those employed in collecting it!

When we remember how many thousand tons of dyeing woods are annually imported, and how many thousand tons of it are absolutely useless woody fibre, we cannot help coming to the conclusion that here chemical science might be applied with great advantage, and that if colonists could be taught how to extract and concentrate the true colouring principles of these woods, much unprofitable labour and expense would be saved; nay more, these concentrated dye-stuffs might be profitably imported from places from which the cost of carriage would altogether prevent the importation of the dye-stuff in its raw state. This is a matter of great practical importance, and on which has not yet received that attention which it deserves; there are no doubt difficulties in the way, but after the many triumphs which science has achieved, we surely need not be deterred by any ordinary difficulties. The consideration of this subject naturally leads to one very closely connected with it, namely, the various substances used in tanning; in which, to some extent, the object just suggested has already been realized. The most experienced tanners all agree, that no substance has yet been introduced, capable of replacing good oak-bark in their art, but, at the same time, they readily allow that many substances are of great value as aids to oak-bark, and in the preparation of particular kinds of leather. The number of astringent barks and woods suitable for this art is very large; but, with few exceptions, the cost of freight would

prohibit their being brought from any distance: in such cases extracts have been made, and imported either in the dry and solid form, like catechu and kino, or as a thick solution, like the mimosa extract of New Holland. The value of these extracts depends in a great measure on the mode in which they are prepared; they should be rapidly concentrated, and exposed as little as possible to the air during evaporation, or otherwise they suffer a considerable degree of decomposition, and their value is proportionably diminished.

Cotton.

I would now draw your attention to another, and a very important division of raw produce, namely, fibrous materials, including cotton, flax, hemp, and a number of less extensively used but still highly valuable products, constituting the great elements of several of our most important manufactures. In the first place, let us briefly consider the nature of cotton, of which this country imports at present about eight hundred million pounds a-year, the value of which, when manufactured, can hardly be estimated under thirty millions sterling.

Cotton may be generally described as a soft, white, tubular fibre found in the capsule of the *Gossypium*, or cotton shrub, and adhering to the seeds. Further, it is well known that there are a great number of different varieties of cotton distinguished by marked peculiarities, and known in commerce either by the name of the country in which they are indigenous, or by some term expressive of their peculiar properties. These differences are not merely to be traced to peculiarities of soil, climate, and

cultivation, though they unquestionably exert a most remarkable influence in modifying the nature of the fibre, but are caused by distinct varieties in the plant itself. Botanists have shown that there are at least four separate and well-markeds pecies of the genus *Gossypium,* namely, *G. Barbadense,* of which Sea Island and Bourbon cotton are varieties; *G. Peruvianum,* the Pernambuco or Brazil cotton; *G. Arboreum,* which yields the Nurma, or native cotton of India; and *G. Indicum,* the cotton of the Mediterranean, Africa, India, China, &c. Of these, the Sea Island has the longest, and the Bengal the shortest staple or fibre.

The chief supplies of this important article are obtained from the United States, for about 84 per cent of the whole quantity of cotton annually consumed in Great Britain is imported from North America; about 10 per cent from the East Indies; nearly 4 per cent from Brazil; and rather more than 2 per cent from the Mediterranean. In North America the cotton plant grows freely and luxuriantly, and its cultivation and the collection of the fibre have reached such a state of systematic excellence, that there appears little further improvement to desire. The Sea Island cotton is long and yet fine, strong and at the same time silky; whilst from the careful manner in which the crop is gathered, the excellent mode in which the seeds are separated from the fibre, and the good arrangements followed in cleaning and packing it, the North American cotton reaches Europe in the best possible condition for the subsequent operations of the manufacturer.

Next in importance as cotton-producers stand the Bri-

tish possessions in the East, but here not only have we a different variety of cotton to consider, but also a different soil, a different climate, and, above all, a different race of people to cultivate it. The native cotton of India has a far shorter fibre than that of North America; little care is bestowed on its cultivation and collection, and little care is taken to protect it from injury, after it is collected. That the fibre is good and fit for manufacturing purposes is evident; for the muslins woven in the looms of India have long shown how the labour and ingenuity of the natives could with this cotton, even in spite of careless cultivation, and imperfect methods, more than match European skill, though aided with all the appliances of modern science and mechanical invention.

For a long series of years the attention of the East India Company has been directed to the improvement of the cotton cultivation, and many costly experiments have been made. In general, the result of these attempts has been, that little success has attended the introduction of long staple Sea Island cotton into India. At the same time, however, it has been most satisfactorily proved that, with due care and attention, excellent New Orleans cotton may be cultivated in the Indian Empire; and further, it has been shown, that with improved cultivation, with good modes of cleaning, and with constant care, the native Indian cottons may be so improved in character, as to become of far more value in the market than they at present possess. It is proved that the deficiencies of East Indian cotton do not depend on any inferiority of soil or climate, but merely on the careless or ignorant practices

of those who cultivate it; and that, with continued care and attention, and by persevering in the introduction of improved methods, a complete change will in time be effected, so that, ere long, any quantity of sound and good cotton may be imported for the use of manufacturers from British India.

The cotton at present imported from the British colonies does not quite amount to a million pounds yearly, not an eighth part of one per cent of the whole quantity imported; it is, however, rapidly increasing, and as regards quality, is highly deserving of praise. The cotton of British Guiana is excellent, and some of that lately sent over from the South African colonies is also very promising. Considerable progress is also being made in the cultivation of cotton in the northern parts of Africa; the specimens contributed from Algeria give ample evidence that its cultivation has been well and judiciously carried on, and are most creditable to the colonists.

The operation of cotton-cleaning is one of very great importance, for unless it is well and properly carried on, all the previous cares of the planter are of little avail; by the term "cleaning" is not meant the separation of accidental impurities, but the removal of the seeds, which is either effected by an appropriate mechanical arrangement called a "saw-gin," or by a simple roller; considerable difference is found to exist between the different varieties of cotton, in the force with which the fibre adheres to the seed: in the black-seeded varieties it separates easily, whilst in the green-seeded cotton it adheres so firmly, that it can only be separated by the use of the saw-gin. In

using this instrument, in which, by the rapid rotation of of a series of circular saws, the cotton fibre is caught and pulled from the seed, care must be taken or the fibre will be injured, by being broken or cut by the teeth of the saw. It is obvious that this is a serious fault, because the injury done cannot be remedied by any subsequent treatment. I mention it now chiefly because some of the finest cotton shown in the Exhibition, though beautiful cotton, clean, fine, and strong, was evidently injured by being *over-ginned.*

And here, before dismissing the subject of cotton, I would say a few words respecting Mr. Mercer's new process for modifying its chemical and physical properties, not only because it received the marked approval of the Jury, but also because it seems likely to produce very important alterations in the manufacture of cotton generally. The fibre of cotton, when examined by a lens, is found to consist of a flattened or ribbon-shaped tube; when treated with a cold strong solution of caustic soda, as in Mr. Mercer's process, it appears to shrink, and assumes the form of a simple cylinder; thus three important and very remarkable alterations occur at the same time,—the fibre becomes stronger, it acquires increased attraction for colouring matter, and it becomes smaller: the process is at once cheap and effectual, and the cotton is decidedly increased in value. In most cases where chemical agency is applied in the preparation of vegetable fibres, either to remove impurities, to destroy colour, or indeed for any other purpose, the object in view is generally attained at the sacrifice of a little strength; it is therefore a peculiar

feature of this discovery that the valuable properties conferred upon the cotton are not only not gained at the sacrifice of its strength, but, on the contrary, are even accompanied by an increase of tenacity.

Flax.

Passing next to the consideration of flax and hemp, a subject of peculiar interest at the present time in this country, I must briefly remind you of the leading principles followed in their preparation, before speaking of the present state and future prospects of this important branch of national industry. The stem of these plants consists essentially of a woody core, and a sheath of fibrous matter surrounding it, cemented together by a peculiar sort of vegetable glue, which binds the whole into one solid reed or stem. In the preparation of flax, the great object in view is the removal of this matter, so that the fibrous part being no longer bound together, may be easily separated from the woody part of the stem. This vegetable glue is insoluble in water, but when steeped in that liquid, or indeed when exposed to moisture, it soon begins to ferment or undergo a sort of slow putrefaction. For ages it has been the practice to cause this slow putrefaction of the stems, either by exposing the flax plant to the dew, or by steeping it in ponds or pits of stagnant water, or by sinking it in the bed of a deep and slowly flowing river. To all of these three modes there are serious and strong objections; putrefaction is a slow, irregular, uncertain, and unwholesome process, it takes up much time, and the result is uncertain, because if it is not closely watched it may easily

proceed too far, and the fibre be then destroyed or greatly injured.

From time to time various ingenious modes of preparing flax by machinery have been devised, in which by the simple application of suitable mechanism the fibrous part should at once be separated, and obtained fit for spinning; it does not appear that any of these plans were found practically available, however promising they seemed when first they were proposed.

Within the last few years an important improvement has been made in the old mode of *retting* or *rotting*, which, as it remedies some of its defects, is certainly a step in the right direction. In Schenck's process, warm water is used to steep the flax stems in, the required fermentation is at once brought on, hours in place of days are necessary; and from the short time occupied, the certainty with which the desired effect is produced, and the complete control which the operator has over it, all fear of over-retting is altogether removed. The practical result, which may now be considered as satisfactorily established, is, that flax retted by Schenck's warm-water process is equal to the best flax as prepared under the old methods, and that whilst time and money are economized, and some of the objections of the old methods are removed, there is less danger of injuring the fibre, and hence a far more uniform fibre is obtained; in fact, the average product of the new mode is superior to the average product under the old process.

In speaking thus, however, of this method of preparing flax, I do not wish to express anything more than a con-

viction that it is a marked improvement on the old method; I do not consider it as a perfect process, or one that leaves nothing to be desired; on the contrary, I am strongly impressed with its faults and imperfections, and I have little doubt that in a few years we shall see it set aside and superseded by a far better process. Fermentation is at best but a rude and imperfect mode of separating one kind of vegetable matter from the others, with which it is associated in a plant.

Of course the same general remarks apply also in the case of hemp, which, though from its being a coarser fibre, it is less liable than flax to be injured in retting, is unquestionably often greatly deteriorated by the fermentation to which it is exposed; indeed in the old modes of preparing hemp, it was never considered to be retted enough until it was evidently injured. In illustration of this rather strange statement, let me refer you to Antill's observations on dressing hemp: he says, "To know whether the hemp is rotted enough, take a handful out of the middle row, and try with both your hands to snap it asunder, if it break easily it is rotted enough, but if it yet appear pretty strong, it is not, and must lie longer till it breaks with ease."

Of the various other changes which the cultivation and preparation of flax and hemp is now undergoing, there is only one to which I would draw your attention, as it was prominently brought before the notice of the Jury, and as it has excited considerable attention from the accounts which have been published respecting it in the newspapers: I refer to the flax-cotton of Mr. Claussen, who proposes to convert flax into a sort of cotton, or rather, by the action of

solutions of carbonate of soda and of sulphuric acid, to split up and divide the fibre, thus rendering it available as a substitute for cotton, and enabling the manufacturer to use it in mixed fabrics, by spinning it in combination with cotton, wool, and silk, on the ordinary machinery used at present for those fibres. I must confess that I am not at all sanguine as to the benefits to be derived from this proposal, though I think it by no means impossible that it may hereafter lead to valuable and important improvements.

Fibres.

I now come to the third division of vegetable fibres, and here we have a wide and very comprehensive subject opened out to our consideration, namely, the various substitutes for flax and hemp. The most important of these are Jute, the fibre of certain species of *Corchorus;* Sun, the fibre of the *Crotalaria;* Manilla hemp, obtained from *Musa textilis* and *paradisiaca;* Coir, the fibre of the cocoa-nut; pine-apple fibre; New Zealand flax; China grass, and Calooee hemp, obtained from various species of *Urtica.* In calling these the most important, I ought perhaps rather to say those best known in commerce; for I am by no means sure that they are so good or valuable as some of the less generally known vegetable fibres. I might easily enumerate a long list of plants, yielding strong and serviceable fibres; the great difficulty which hinders their practical use in the arts, is the want of a good and easy mode of separating them from the other vegetable substances with which they are associated in the plants. That

process which shall give us the means of preparing hemp and flax without the use of fermentation, will probably also enable us to use many other vegetable fibres quite as good, if not even better, for most purposes, than they are. Amongst the fibres of India, and of South America in particular, there are several which promise hereafter to be of the greatest value; I would now only mention the Jetee, or bow-string hemp of Rajmehal; the fibre of the *Calotropis* or *Asclepias tenacissima*, and the fibres of the *Sanseveria* and *Hibiscus*.

The attention of practical men has been long directed to the strong and very beautiful fibre of the so-called China grass, which, it has recently been shown, is closely allied to, if not identical with, the Calooee hemp, or Rhea fibre of India. A simple but efficacious method of preparing this valuable fibre has lately been devised by Messrs. Wright, depending chiefly on the solvent powers of a hot solution of carbonate of soda, and its use is consequently rapidly increasing, particularly in the formation of mixed fabrics; when well prepared it has all the lustre and brilliancy of silk. There is no doubt that with a little trouble this fibre may be had in almost unlimited quantities from India.

Before dismissing the subject of these vegetable fibres, let me remind you of the beautiful silk cotton obtained from the *Bombax* and other trees in various parts of the world. This fibre is short and remarkably elastic, though at the same time, unfortunately, very tender; it is in India spun into a loose and coarse, but very warm, cloth; whilst in Europe it is generally considered as of no value; lately

it has been applied advantageously in America to the manufacture of silk hats, for which purpose it is said to answer admirably. Of these fibres, likewise, almost unlimited quantities may be had.

Timber.

And now, turning to the last class of raw produce under our consideration, let us devote a few moments to the important division of wood and timber; a subject so extensive, that there are few who are not more or less interested in some of its numerous bearings, and the many purposes to which wood is applied, whether in building ships, in building houses, for engineering purposes, or merely as an article of ornament.

The quantity of wood of all kinds, annually imported into Great Britain, is not much less than ten millions of cubic feet; it is, therefore, a question of no small moment, to know from whence we are to obtain such an enormous quantity in future years; which are the best woods, and from whence we may expect to obtain them most economically, and with the least risk of failure in the supply.

The number of woods at present admitted as first-rate for ship-building purposes is not more than eight; namely, English oak, live oak, African oak, teak, saul, greenheart, morra, and iron-bark: the latter only admitted as a first-class wood since the opening of the Great Exhibition. The number used in ordinary architecture is, of course, far greater; and the number used for the ordinary purposes of the carpenter is very large, because in each country the

strongest, cheapest, or handsomest woods are employed, according to the purpose for which they are required.

In tracing the history of any large forest, it will generally be found that when man first began to cut down the trees, he did so in the most wasteful and reckless manner, without any thought for those who should come after him. The result has usually been, that in a brief period of years, the more valuable timber trees have become almost exterminated, no care having been taken, by the regular formation of plantations, to ensure a future supply. I will say nothing of the extent to which this has gone in foreign countries, where often whole forests of valuable timber have been burnt solely for the sake of converting their ashes into manure, but I will merely remind you of the gradual destruction of timber which has gone on for centuries in our own country, leading, as it did, almost to the extermination of the pride of the land, the oaks of old England! It was not till the matter became one of urgent necessity that steps were taken to stay the evil. It was the gradual falling off in the supply of good oak suitable for ship-building purposes which led to the importation of foreign woods, and also to the purchase of colonial-built ships; and this in turn has led to a due appreciation of the real value of some of those woods. Almost every year is adding to the list of acknowledged good and serviceable timber trees, and new sources are constantly being discovered.

It has never before happened that so large and important a collection of woods has been brought together, as we had recently an opportunity of examining in the Great

Exhibition, amounting as it did to several thousands. There were good specimens of the well-known old woods of commerce; specimens of most of the new ones recently introduced, and of a multitude of woods wholly unknown to commerce, a good many of which possess qualities calculated to render them highly valuable in the arts.

Amongst the less generally known woods lately introduced into commerce, mention may be made of the morra and greenheart of British Guiana, both excellent for ship-building; and the muskwood, blackwood, Huon pine, and blue gum of Van Diemen's Land; the three former valuable as beautiful ornamental furniture woods, the latter an enormous timber tree, which promises to become of much importance for ship-building. Fine samples of the wood of various species of Eucalyptus were also contributed from Western Australia. It was stated that one of these trees, fourteen feet in diameter, was cut down on purpose, and that a plank of that width would have been sent over to the Exhibition, but that it was found impossible to do so, for want of saws of sufficient size to cut up the log. Two slices or sections cut from the stem of one of these magnificent trees were, however, exhibited by Sir William Denison, though, perhaps, they excited less attention than they deserved, from the circumstance of their being hidden under the pile of Canadian woods in the centre of the nave; the larger of these sections was about six feet in diameter, the smaller one nearly three; the first was cut four feet above the surface of the ground, the latter at a height of 134 feet, just below the first branch!

Amongst the South African woods, too, there is one

deserving of notice, exhibited under the name of red ebony; of the tree which produced it nothing is known, but its nature is so peculiar, and its properties as an ornamental wood are so valuable, that it is a substance of considerable interest. It is dense and tough, has a fine red colour, and is so close and uniform in grain, that it resembles ivory rather than wood. It promises to be an important addition to the ornamental hard woods of commerce.

It is found that the value and properties of wood vary very greatly according to the soil and climate in which it grows; it is well known that the oak timber grown in neighbouring parishes often varies in goodness to a remarkable degree, and certain parts of England used formerly to be celebrated as yielding the most valuable ship timber. Precisely the same holds good on a large scale, and the same tree, which grown in one country affords a first-rate timber, may in another situation yield a very inferior wood. Thus the wood of a teak-tree grown in Malabar will be decidedly superior in quality to the wood of one grown in Moulmein, and the mahogany grown in Cuba will be more valuable than the same tree grown in the swamps of Honduras. It is unnecessary to point out the important bearing of these facts on the formation and management of forests.

Next in importance to obtaining good wood, the modes of seasoning and preserving it ought to be mentioned; and when we remember how prone vegetable matter is to decay, and how much often depends on the soundness of a single plank, I need not say much as to the careful study

and consideration which this subject deserves. The evils arising from the decay of wood are innumerable, and it is only from the frequency of their occurrence that we are at last led to regard them as almost necessary, and without a remedy. The decay of wood used in buildings is, indeed, a matter of the most serious importance, but it is far more so in all those cases where the timber is either sunk in the ground or plunged under water. Let me remind you, by the way, that the room in which we now are, and, indeed, all the surrounding buildings on the bank of the Thames, are entirely supported on wooden piles; and these are all, no doubt, in a greater or less state of decay.

To meet these evils the ingenuity of man has been directed, in the first instance, to modes of drying and seasoning woods, whereby those matters in it most liable to decay are removed, or rendered more stable; and, secondly, to methods of impregnating wood with various substances, calculated to preserve it from change. It is evident that the merits of any plan of this kind cannot be ascertained for a great number of years, because until it shall have been practically tested by satisfactory trials extending over a long period of time, its value cannot be considered as proved, and any premature statement can only be considered as an assertion or matter of opinion. Amongst those plans which have excited most attention are those of Messrs. Boucherie, Burnett, Bethell, and Payne; and some of the results already obtained are certainly highly promising. On the subject of timber, as in all the preceding classes, there is the same want of information, and the same difficulty in learning that which

is known. Of the new woods only just introduced for ornamental purposes, such as the Huon pine, specimens have long remained concealed in cabinets and museums, and very nearly the same may be said concerning the more important timber trees, such as the iron-bark. On the other hand, of the eight acknowledged first-class woods, one at least, namely, the African oak, is the produce of an unknown tree; in fact, all that is known about is, that it certainly is not an oak!

In this necessarily very brief and imperfect sketch of some of the points of interest connected with the six great divisions of vegetable raw produce, I have been obliged altogether to leave out all mention of the new and unexamined substances, of which a considerable number have for the first time been introduced to our notice in the Great Exhibition: of these I will only say, I earnestly hope they will not be set aside as mere curiosities, that they will neither be placed out of reach, on the upper shelves of our museum galleries, nor yet consigned to oblivion in their cellars!

Before concluding, then, let me remind you of the practical conclusions to be drawn from this department of the Great Exhibition; and the facts, whether old or new, which it has brought out in a striking manner.

The wants, the curiosity, and the ingenuity of man, have made him acquainted with the uses and properties of many of the productions of the vegetable kingdom; but, nevertheless, all that he knows, and all that he has done,

does not amount to a tenth part of that which yet remains to be studied and applied. Our trade and commerce is but a trifle compared to the almost boundless wealth of Nature.

Our traders, our manufacturers, and our men of science, are wholly ignorant of many matters connected with these subjects; and the prejudices of men of business, the forms of trade, the regulations of the custom-house, the influence of laws, and the indifference of men of science, have all contributed to retard the spread of such knowledge.

If any one thinks, that in saying this I am at all overstating the truth, let him endeavour to learn the history and developement of any one trade, and he will be surprised at the difficulties which he encounters. As I have said before, we have no books which contain full and complete accounts of any single class of raw produce, scientific, practical, commercial, and statistical; nor have we collections in which the things themselves are arranged, and the information deposited. The books which treat of these matters are meagre and incomplete; old facts are left out because they are old, and, perhaps, because in the opinion of the author, they are of no value, and no references are given to those previous authors who have studied the same subject. Our hard-working and laborious neighbours, the Germans, have long felt the necessity of always giving lists of authorities, and hence their books are in many cases far more valuable than our own, not only more full and copious, but also of far more use to the student after truth, because they guide him, and enable

him to become a thorough master of his subject by referring him at once to the works of all those who have written upon it.

On the various branches of pure science we have many and excellent books; but on applied science, and on the relation of natural science to the arts and manufactures, we have few deserving the name. In the case of the applications of human ingenuity, as in that of the productions of Nature, we have the same imperfect means of acquiring knowledge — even those inventions which have received the special protection of the Government, — patented inventions; if you would trace the progress of the improvement which any art has undergone, you must undertake a search as tedious, as troublesome, and almost as expensive, as a search for an old will in the musty recesses of the Consistorial Prerogative Office!

If, then, you would make yourself thoroughly acquainted with such a subject, you must wade through many books. First, you will have difficulty in knowing what books to refer to; then you will have trouble in knowing where to find them: and after all, when you have got over these difficulties, in all probability you will be disappointed, because the books will not have taught you half you desire to know. Now, the practical result that necessarily follows from these difficulties in the way of knowledge is, that true progress is retarded; time, labour, money, and ingenuity, are all wasted, in re-inventing old inventions, and in discovering facts which a previous generation had already discovered. Truly may we say, "Life is short, but art is long."

The Society of Arts is one of the chief, and for a long time was, in fact, the only public body established for the promotion of industrial art; and at its first foundation it endeavoured to act the part of a mediator between the cultivators of raw produce and the manufacturing consumers. It offered premiums for the discovery and introduction of all sorts of useful materials, and expended considerable sums in developing the productive resources of our colonies. It pointed out the wants and requirements of mechanics, and at the same time drew attention to those articles of raw produce, which especially stood in need of improvement. The Society deserves the highest praise for the good which it has done, but at the same time we cannot help regretting that it has not done much more. In the Great Exhibition there were innumerable examples of the skill and ingenuity wasted in re-inventing old inventions; and in the same way you would be surprised, on looking over the early volumes of the Society's Transactions, to find how many of the important inventions of modern days are contained in them. Let me refer you, for example, to the volumes for 1775 and for 1801. In these you will find references to the silk-cotton, the cotton-seed oil, the various East Indian fibres, and the flax-cotton. In Dr. Roxburgh's communication* are detailed experiments on the fibres of the *Corchorus*, the *Asclepias*, the *Urticas*, or China-grass, distinctly proving their value and importance,—showing them to be as good or better than flax and hemp; and yet more than half a century has

* "Trans. Soc. Arts," vol. xxii. pp. 363–396; xxiv. pp. 143–156; and xxiii. p. 407.

elapsed, and these fibres are only just beginning to receive the attention of manufacturers. In the case of flax-cotton, we have recently been strongly impressed with the great importance of a discovery by means of which the fibre of flax can be converted into a sort of cotton, capable of being carded like ordinary cotton, possessing the advantage, that it may be employed with wool or cotton in the manufacture of mixed fabrics, and having an increased affinity for colouring matters. Now, nearly all this was done about eighty years ago by Lady Moira, and is published in the First Volume of the Society's Transactions. She states that tow and refuse flax of all sorts, boiled with an alkaline solution, and afterwards scoured, is converted into a sort of cotton, which she believes takes the dye better than flax. The result of this process is, that "the fibres separate from one another," after which it may be carded like cotton. It is highly interesting to observe the fate of Lady Moira's scheme: she says, "It is plain that the material of flax-cotton in able hands, will bear manufacturing, though it is my ill fortune to have it discredited by the artizans who work for me . . . . . and getting spun an ounce of this cotton in Dublin I found impracticable. The absurd alarm, that it might injure the trade of foreign cotton, had gained ground; and the spinners — for what reason I cannot comprehend — declared themselves such bitter enemies to my scheme, that they would not spin for me. Such is my fate, that, what between party in the metropolis, and indolence in this place, I am not capable of doing my scheme justice. That it should ever injure the trade of foreign cotton is impossible."*

* Vol. i. pp. 202–213.

The suggestion of Lady Moira, though it came to nothing at the time, was not altogether without effect; for the manufacture of flax-cotton was taken up with considerable spirit in various parts of the continent, though in every case the process seems soon to have been relinquished. Amongst other authors who have written favourably on this subject, I may mention Beckmann and Des Charmes, who both speak of the great similarity of flax-cotton with ordinary cotton. The latter recommends cutting the flaxen tow into proper lengths before converting it into cotton.

Lady Moira sent over specimens of the articles manufactured with flax-cotton to the Society, and they are now upon the table before you; and I will only say of them, that I did not see in the Great Exhibition any better samples of flax-cotton than those prepared more than seventy years ago. I will also quote to you a brief statement by Mr. Bailey, of Manchester, contained in a letter to the Society, dated 1775: "Some of the most ingenious manufacturers in and about Manchester are most extremely pleased with this new staple, and think, if properly attended to, Lady Moira's invention may prove a fruitful source of wealth."

These are, however, but a few out of many similar facts I might mention: they show plainly, that had the original objects for which the Society was established been strictly adhered to, and had its means enlarged in proportion to its utility, we should now have a most valuable record of the progress of human industry during the last hundred years: in fact, a great industrial museum of the whole world, not a mere magazine or storehouse in which

natural productions and ingenious contrivances are piled up in endless confusion, where they may remain buried for ages, but a practical, useful, and well-arranged series, denoting past progress, and leading to future improvement —a place of reference, in which useful knowledge of all sorts would be accessible to every one, and at all times available for purposes of instruction.

The admirable collection of Liverpool imports, contributed by Mr. Archer to the Great Exhibition, though of course confined to articles at present known in commerce, and necessarily far from complete, is still a good specimen of the way in which such a series may be made to convey practical information. To be of real value, it should be far more extensive, and it should also be accompanied by much more copious information, and by illustrations of all sorts. For example, dye-stuffs should be placed side by side with samples of the colours they yield; and, in every case where practicable, the use of each substance should be illustrated. All imperfect as the Liverpool collection was, I question whether any one could spend an hour in looking over its contents, without learning some useful facts which he did not before know.

The idea of a Museum of Industry is by no means new, for full thirty years ago S. E. Von Kees, who was then Chief Inspector of Factories in the Austrian Empire, formed a collection of the raw produce, and likewise of the manufactured articles, at that time used in Austria, and added to it, by way of comparison, a great number of the productions of other countries. This collection contained upwards of 12,000 specimens, and the descriptive catalogue

extends over more than 2300 octavo pages. This catalogue, as a work of reference, is of considerable value, and in some points might have given useful hints to the compilers of the Catalogue of the Great Exhibition. One important feature in it is the fact, that in most cases prices are given, whilst in the Exhibition Catalogue all statements relating to price were inadmissible, in accordance with a decision of the Royal Commissioners. It is much to be regretted that this was deemed necessary, for the value of the Catalogue is, of course, greatly diminished by the exclusion of information of such paramount importance. It is curious to observe, that Von Kees was led to form his museum, in the first instance, for his own private instruction, when he received the appointment of a Commissioner of Factories in 1810, and at first his collection was confined to manufactured articles alone; he soon found, however, the necessity of extending it, and rendering it more instructive, by the addition of raw produce—thus forming a complete Trade Museum.

The Great Exhibition has strongly shown the want of such a collection in England, and I feel that it is not foreign to the objects contemplated in these Lectures, if, in conclusion, I should ask my brother members why should not we, even now, commence the formation of such a collection; why should not the Society of Arts undertake that which would be so great a public benefit?

In throwing out this suggestion, I would remind you, not only that the Society of Arts possesses greater facilities than any other Society for collecting a great Trade Museum, but also that the many valuable and interesting specimens

already in the drawers and cabinets of our model-room, constitute of themselves alone a collection of the very greatest practical importance.

With those who say that we need an enlarged and comprehensive system of National Education I agree heart and soul; but I would even go farther—I say, let us have the means of teaching the schoolmaster as well as the scholar; let us, by collecting sound facts and useful information, obtain those means of instruction in applied science, which are at present almost wholly wanting.

Jan. 21, 1852.

LECTURE VIII.

ON MACHINES AND TOOLS FOR WORKING IN METAL, WOOD, AND OTHER MATERIALS.

BY THE

REV. ROBERT WILLIS, M.A. F.R.S. &c.

JACKSONIAN PROFESSOR IN THE UNIVERSITY OF CAMBRIDGE.

THE

REV. ROBERT WILLIS, M.A. F.R.S. &c.

ON

MACHINES AND TOOLS FOR WORKING IN METAL, WOOD, AND OTHER MATERIALS.

THE portion of the Exhibition which it is proposed to consider this evening, must be considered under a very different aspect from those which have formed the subject of the previous Lectures. Considering the entire collection as made up of *Natural Materials, Artificial Products,* and the *Processes* by which the first are converted into the second, it is easy to show that the two first of these groups were exceedingly well and completely represented, and generally interesting and intelligible; but that the last, under which our present subject is included, was, on the contrary, imperfectly represented, and so little understood, as to lose much of its interest.

The consideration of natural or raw materials, belonging as it does to the natural sciences, has been long familiarised to all, as furnishing the most instructive, delightful, and interesting subjects of study and amusement, either in the animal, vegetable, or mineral kingdoms, according to the taste or habits of each observer; and the practical

view of the subject which is especially directed to the useful purposes to which these natural materials may be applied, has been also long since illustrated by collections like that of the Museum of Economic Geology and others, which paved the way for the magnificent and complete collection in the Great Exhibition, in which all nations combined to display with gratitude and pride the natural treasures, of which they are the several depositories, as stimulants to industry and commerce.

The products include the great mass of objects that constitute our food and clothing, contribute to our daily necessities, comforts, and luxuries, and minister to our employments, or to the enjoyments we derive from the fine arts; and thus every person is in one way or other interested in them, and may understand them. The completeness of this part of the collection was also greatly promoted by the commercial advantages that promised to accrue to the exhibitor, as well as to the spectator, by the universal display and choice of all the useful and ornamental results of industry, for the first time offered in one vast bazaar by the whole world of manufacturers to the whole world of customers.

How different is the case with the processes and the machines concerned therewith! In many cases noisy, offensive, and dirty, or requiring conditions of heat or damp, which made it impossible to carry them on in the presence of spectators; and if not labouring under these disadvantages, at least requiring long explanations and experiments to make them intelligible; it is plain that no attempt at a complete collection could be made, if, indeed,

such a result were desirable. Enough of manufacturing machines were really shown to give to the general spectator an idea of their beauty of form and workmanship, and of the precision of their action, according to the style and manner of machine-making which characterise the present age; and such processes were selected for daily practice as were intelligible, at least by their results, if the steps that led to them remained mysterious to the lookers-on. Sheets of white paper, entering at one end of a machine and duly delivered at the other in the complete form of a printed newspaper; envelope folding; weaving and spinning, and the like, served to show the general character of machine-craft, as contrasted with the slow production of such articles by the handicraft methods with which most of the spectators were familiar.

These practical obstacles applied, perhaps, the most forcibly to the class which is appropriated to the present evening, namely, machines for working in wood and metal, which require a solid foundation, are necessarily accompanied in use by noise, chips, and other annoyances, and are expensive to maintain in action, and not, generally speaking, intelligible or interesting to ordinary spectators, at least without systematic explanations, which could not be afforded under the circumstances.

I trust that I have now said enough to show that, without in any respect disparaging the Exhibition, or casting any shade upon that most admirable and unique incident of human history, which we have been so accustomed to look upon with unmixed admiration and delight, we must admit that, from the very nature of the case, this one de-

partment was very incompletely represented with respect to the machinery of our own country, and, of course, still more so with respect to other countries. Any attempt, therefore, to estimate from the Exhibition Catalogue the extent to which machinery is used in the manufactures of this or any other country, considered separately, or its relative employment by different countries, would lead to the most fallacious and unjust conclusions.

But one part of my duty this evening, which forms a principal point of the instructions under which I, in common with my colleagues upon this occasion, have the honour of acting, is "to state freely and without reserve my opinion upon the probable immediate effect of the Exhibition on the particular subject of the lecture."

For the reasons above stated, it is much more difficult to foresee and trace the effects that may be expected in the department at present under review than in the other branches of the collection. But there are two very desirable objects which I shall proceed to develope, and which, if we take advantage of the interest excited on the subject of manufacturing science and art by the Great Exhibition, we may possibly succeed in bringing to bear.

The first object is to effect a more intimate union and greater confidence between scientific and practical men, by teaching them reciprocally their wants and requirements, their methods and powers, so that the peculiar properties and advantages of each may be made to assist in the perfection of the other.

The second object is to promote a more universal knowledge amongst mechanics and artisans of the methods

and tools employed in other trades than their own, as well as of those employed in other countries in their own and other trades.

With respect to the first object, it is no secret that there has always existed an unfortunate boundary wall or separation between practical and scientific men, a mutual distrust or misunderstanding of their relative values, which has deprived them of many great benefits that they might have mutually derived from each other's pursuits. It is true that in many branches of science, as in chemistry, geology, and botany, this barrier has to a great extent been broken through; the practical man has found the benefit of scientific generalisations, and the theorist has been compelled to seek the facts upon which his theories are to be based in the mines and manufactories; thus compelling the two classes to work together and learn to understand each other. Still there remains too much of the ancient contempt for "theory," and of an overweening and conceited value for "facts" and "practice."

In no department of science is this carried to a greater extent than between the mathematical and practical mechanics; and yet the mental process by which the parts of a complex machine are contrived and arranged in the brain of the inventor requires the geometrical faculty, as it is called, to a very high extent: that is to say, the power of conceiving mentally the relations of the parts of complex figures in space. So that, in truth, a man gifted by Nature as a mechanist is also qualified as a geometrician; and the untaught inventor, struggling to give form and reality to his conceptions of a new machine, is,

in reality, practising imperfectly and unknowingly the very geometrical science he despises, and which, if he had acquired its elements, would at once have shown him how to systematise and arrange his ideas.

For the system of mathematics, as it now exists, is the accumulated result of many centuries' work of men thus naturally gifted with the geometrical faculty; and the man who now, directing this mental power to the confection of machines, professes to exercise it "self taught," is acting on the presumption that he alone can begin from the beginning, and dispense with the labours of those men of mighty intellect who worked so long to prepare a system for those who were to come after them. To ignore such labours is a piece of mighty presumption and a pure waste of intellect, which usually brings its own punishment in the loss of time and imperfection of the result. "Self teaching," in this sense of determined rejection of the previous labours of others, so far from being a source of pride and gratification, is a piece of folly, to use the mildest term, if it might have been avoided; and a lamentable misfortune, if the sufferer has had no opportunity of knowing what had been already previously effected and prepared by others in the same line.

Of a piece with this is the case of persons who pride themselves upon executing very difficult works with implements not intended for the purpose, such as elaborate carving, which, we are told, was all done "with a common penknife." The experience of carvers of all ages having shown that there are certain forms of chisels and gouges that are proper for this work, a sensible man would cer-

tainly not waste his time by using the worst form of a cutting instrument that he could choose for this particular service. So far from admiring, we should pity the vanity and folly of such a display; and the more, if the merit of the work should show a natural aptitude in the workman: for it is certain, that if he has made good work with a bad tool, he would make better with a good one.

To perfect and reduce to practice the idea of a new machine is no light effort of the intellect, and in proportion to the education of the inventor, so will his steps be rendered surer, more direct, and more rapid. As far as the relative motions of the parts of his machine are concerned his natural faculties may carry him, and probably suggest a variety of constructive methods and cunning devices by which these may be effected; but, in the next place, it becomes necessary to select from these the most appropriate to sustain the forces and resistances, — to estimate the strength to be given to the different parts, their proper qualities of weight, of lightness and stiffness, the amount of friction, and a variety of other complex conditions, which can only be determined by statical or dynamical knowledge, but which are necessary to ensure the durability, easy and economical working, and practical value of the contrivance.

In the absence of the proper technical knowledge of theoretical mechanics, the proposed machine, if it possess any value, will only arrive at its perfect and permanent form through a series of abortive attempts, which, by a succession of failures and repairs, may perhaps lead to the removal of the weak points of the contrivance. Those

parts which by chance were made unnecessarily strong and heavy, will probably retain their original errors.

The representations of machines and engines in the collections published in the sixteenth and seventeenth centuries, furnish abundant illustration of these remarks. In all that belongs to the mere motion of these contrivances, the greatest possible ingenuity and fertility of invention is displayed. But in all that concerns construction, framing and adaptation of form and dimensions to resistances, strains, and the nature of the work, a total absence of principle and experience is manifested; so that it is apparent that these machines would act very well in the form of models, but that, if actually set to work, the most of them would knock themselves to pieces in a very short time.

A profound knowledge of theoretical mechanics is not necessary for all persons concerned about machines, any more than an elaborate acquaintance with the entire subject of astronomy is needed by every sailor. Yet sailors have no horror of mathematics, and know very well how to make use of the parts that are prepared for them. And all men who are engaged in the contrivance of machinery, whether in reducing to practice their own inventions, or those of others, should be competently instructed in the elements of the subject, as well as in the history of machinery; and the artisans themselves would find their labour greatly facilitated by a knowledge of geometry and mechanics to a limited extent, proportioned to their requirements.

We may hope that one of the permanent results of

the Exhibition may be, that men's minds being more forcibly led to the consideration of the subject, a system of professional education for practical men may be organised, so as to enable every one to obtain just so much as may be necessary for him in his own position.

The preparation of such a system of education is difficult, and requires great care to avoid the error of teaching much that is unnecessary, and that, in fact, cannot be comprehended, unless by a student who intends to devote much more time, and to enter much more profoundly into those branches of study, than is contemplated for the purposes we are now considering. But we know that difficulties of this kind have been already encountered, and, as it appears, successfully overcome in France, after failures had taught experience.

I have already said, at the outset of these remarks, that not only do practical men require theoretical knowledge, but that, also, theoretical men require practical knowledge, a better acquaintance with the difficulties that practice requires them to lend a hand in developing, explaining, and overcoming. To form a system of education, strictly limited to the requirements of practical men, we must know what these requirements are, and must in imagination place ourselves in the position of these men, to understand the difficulties arising from their occupations, which theory may dispel. We must, in short, select the examples and illustrations of our applied mathematics from the familiar cases of actual machine-work, and endeavour to solve them with the least possible

amount of geometry. It way be worth while to consider a little how this may be attempted.

Every machine is constructed to perform a certain specific operation, and accordingly contains parts especially applied to the work in question; which working parts are connected by the mechanism in such a manner, that each shall move according to the law required by the nature of the work. One, perhaps, constantly revolving slowly; another, rapidly; and a third, back-and-forwards, and so on. But the connecting mechanism by which these different motions are tied together may be varied in many ways, and each is common to all machines that happen to require similar co-existent motions in their working parts.

The nature and principles of trains of mechanism, by which dissimilar motions may be thus produced, the one from the other, can be taught without any reference to the work or purpose of machinery, and is, indeed, best so taught. But to illustrate and fix the teacher's meaning, it is well to show examples of the application of each motion to some real machine.

Now it must always be recollected, that the merit of a piece of mechanism may be exceedingly great, if considered as an example of *pure mechanism;* that is, of the ingenuity or profound knowledge displayed in the conversion of one motion into another, although the purpose of the machine to which it happens to be applied may be very trivial. But this is not the way in which the world would judge of machinery; and yet combinations of pure mechanism, that form the essential parts of the most

useful and valuable machines in the manufacturing series, were originally invented for purposes of the most trivial and useless character.

The "*differential box*" of the bobbin-and-fly frame was first contrived for an equation clock; that is, to enable the hand of a clock to move round the dial in such a way as to point to the true time as shown on a sun-dial. The "*slide rest*," as we shall presently see, was contrived towards the end of the last century, to enable the amateur turners of the court of France to ornament their snuff-boxes with more precise patterns of guilloche-work. The motions of a mouse-trap may be found in a steam-engine.

Now, in showing the practical application of any given combination of pure mechanism, one machine will do as well as another; but it is better to select one whose purpose and functions are likely to be readily appreciated by the student, that his attention may not be too much distracted from the *mechanism*. Thus, if I were teaching a mathematical student the differential motion, I should select the equation clock as the example, because its purpose depends upon an astronomical principle which forms part of his proper studies. But if I were teaching a mechanist, I should rather take the bobbin-and-fly frame for my example.

In forming a system of instruction for practical men, therefore, we may, by a more practical selection of examples, be enabled to teach the principles of mechanics, without greatly altering our present methods. It is true that our theoretical writers are rapidly introducing examples of the actual machinery of our own time into their

systems, still these books are necessarily rather intended to teach machinery to mathematicians, than to teach mathematics to mechanists.

It may be remarked that, at least in one branch of mechanics, the "strength of materials," the value of theoretical and experimental science has been fully recognised by practical engineers, and the Britannia bridge may be quoted as a triumphant example of the advantages that arise when theory and practice go hand in hand.

We will now proceed to the immediate subject of our Lecture, namely, the machines for working in metal, wood, and other materials.

The object of such machines is to work rough material into shape, which may be done in three different ways: (1.) By abrading or cutting off the superfluous portions in the form of chips or large pieces; (2.) If it possess ductility, we knead it, or press it into form in various ways, as by hammering, rolling, drawing, &c.; (3.) If it be fusible, we melt it, and pour it into a mould. I forbear to include the producing a given form by joining together pieces, because each piece must be shaped in one or other of the above ways. The most interesting series of machines is that which belongs to the first group; and to this I must, for the present, confine my attention. It may be interesting to sketch the history of their introduction. Machines of this kind are either general, like the lathe or the planing-machines, which are used for a great variety of purposes, or are especially adapted to the production of a single object of manufacture; in which case they are often contrived in a series, as the block-machinery, the machines

for making cedar pencils, and the like, and the introduction of such especial machines is of great importance, and has certainly not yet reached its limits. As the machines of this latter kind are commonly modifications of one or other of the first, the history of the two must be considered together.

The origin of the turning-lathe is lost in the shades of antiquity; and the saw-mill, with a complete self-action, turned by a water-wheel, is represented in a MS. of the thirteenth century at Paris, and is, probably, of much earlier contrivance. The lathe was, in process of time, adapted to the production of oval figures, twisted and swash-work, as it is called, and, lastly, of rose-engine work. The swash, or raking mouldings, were employed in the balusters of staircases and other ornaments at the period of the "Renaissance" in architecture, about the end of the sixteenth century, and, therefore, the swash-lathe assumes somewhat of the character of a manufacturing machine. But the simple lathe was much employed in screen and stall-work during the middle ages. The first real treatise on turning is Moxon's (1680), which gives us a valuable picture of the state of the art at that period, and he has preserved to us the name of the engine-manufacturer of that day, Mr. Thomas Oldfield, at the sign of the Flower-de-luce, near the Savoy in the Strand, as an excellent maker of oval-engines, swash-engines, and all other engines, which shows that such machines were in demand. A few drawings of such machines occur in earlier works, beginning with Besson, in 1569. From the treatise of Plumier, published at Lyons in 1701, we learn

that turning had long been a favourite pursuit in France with amateurs of all ranks, who spared no expense in the perfection and contrivance of elaborate machinery for the production of complex figures. This taste continued at least up to the French Revolution, and contributed in a very high degree to the advancement of the class of machinery that forms the subject of our present evening. In our own country the literature of the subject is so defective that it is very difficult to discover what progress we were making during the seventeenth and eighteenth centuries. A few scattered hints only can be collected, whereas in France the great "Encyclopédie" and other works, abundantly illustrated, give the most precise and accurate knowledge of the state of this and other mechanical arts.

Smeaton has recorded that, in 1741, Hindley the clockmaker of York showed him a screw-cutting lathe, with change-wheels, by which he could, from the one screw of the lathe, cut screws of every necessary degree of fineness, and either right or left-handed. It seems to be implied that this was a novelty, and that Hindley had invented it; and it was soon imitated by Ramsden, and is now universal. At all events, such a machine is not alluded to in the French works already mentioned, and serves to show the advance we were then making in the practical improvement of the lathe.

But the clockmakers, to which body Hindley belonged, were the first who employed *special machines* for their manufactures. Their *wheel-cutting engine* has been ascribed to Dr. Hooke, about 1655, and its use rapidly

spread over the Continent. The gradual improvement of this machine, and the successive forms which it assumed as the art of construction was matured, forms a very instructive lesson. But herein our own countrymen have largely contributed to its perfection. Henry Sully, an English clockmaker, who removed to Paris about 1718, carried with him, amongst other excellent tools, a cutting-engine, which excited great admiration there. The form of the present French engine is, however, derived from Hulot's machine (about 1763). But our English engines, in which the dividing-plate is superseded by a train of change-wheels, so contrived as to require an entire turn of a latch-handle for each shift, and thus secure against error, is derived from Hindley's engine, which he showed to Smeaton in 1741, and which finally passed into the hands of Mr. Reid of Edinburgh.

The *fusee-engine*, which is another special clockmaker's machine, must have greatly contributed to the perfection of machines for working in metal.

But the next great step towards the perfection of machine tools was the *slide-rest*. The slow and gradual way in which this invaluable device acquired the distinct and individual form in which it now exists, is a very curious example of the history of machinery, the developement of which, at length, would occupy too much space on the present occasion, even if it could be made intelligible without drawings. Suffice to say, that although as early as 1648 Maignan published at Rome* engravings of two

* "Perspectiva Horaria," p. 689.

curious lathes for turning the surfaces of metallic mirrors for optical purposes, in which the tool is clamped to frames, so disposed that when put in motion it is compelled to move so as to form true hyperbolical, spherical, or plane surfaces, according to the adjustment, and that although the fusee-engines, screw-cutting lathes, and other contrivances already alluded to, employed tools guided by mechanism, yet the real slide-rest does not make its appearance until 1772, when in the plates of the French "Encyclopédie,"* we find complete drawings and details of an excellent slide-rest, as nearly as possible identical with that usually supplied by Messrs. Holtzappfel and other makers of lathes for amateurs. It must have been contrived a little while before this publication; but the meagre descriptions that accompany the plates leave us completely in the dark with respect to its history. Bramah's slide-rest of 1794† is so different and so inferior in convenience, that the two could not have had a common origin; and we must suppose that the French slide-rest was unknown to that ingenious mechanist, although it is scarcely possible that copies of the "Encyclopédie" should not have found their way into our libraries.

But the improvements of the steam-engine, its application to giving motion to the wheels of mills and other machines, the increasing employment of iron, and other advances in the construction of mechanism, which were now developing themselves, gave men courage to devise and carry out large and extensive schemes for the applica-

* Tom. x. pls. 37, 38, 84, 85, 86.

† Weale's edition of "Buchanan's Mill-work."

tion of machinery to manufactures. In our especial department we may record, as an early example, Bramah, who, in 1784, obtained the patent for his admirable lock, and immediately set about the construction of a series of original machine tools, for shaping with the required precision the barrels, keys, and other parts of the contrivance, which, indeed, would have utterly failed unless they had been formed with the accuracy that machinery alone can give. In Bramah's workshop was educated the celebrated Henry Maudslay, who, as I am informed, worked with him from 1789 to 1796, and was employed in making the principal tools for the locks.

Foremost among the ingenious persons who carried on this great movement must be recorded Brigadier-general Sir Samuel Bentham.* From his own account it appears, that in 1791 steam-engines in this country were extensively employed for pumping mines, and for giving motion to machinery for working cotton, and to rolling-mills, and some other works in metal; but that in regard to working in wood, steam-engines had not been applied, for no machinery, other than turning-lathes, had been introduced, excepting that some circular and reciprocating saws and working tools had been applied to the purpose of block-making by the contractors who then supplied blocks to the navy; even saw-mills for slitting timber, though in extensive use abroad, were not to be found in this country.

General Bentham had at this time made great progress

* Bentham's patents. "Repertory of Arts," vol. v. p. 293, and vol. x. pp. 221, 293, 367; also Memoir, by Mrs. Bentham, in Weale's "Quarterly Papers on Engineering," vol. vi.

in contriving machinery for shaping wood, as is sufficiently shown by his remarkable specifications of 1791 and 1793; and he informs us that, rejecting the common classification of works according to the *trades* or *handicrafts* for which they are used, he *classed the several operations that have place in the working of materials of every description according to the nature of the operations themselves*, and, in regard to wood particularly, contrived machines for performing most of those operations whereby the need of skill and dexterity in the workman was dispensed with, and the machines were also capable of being worked by a steam-engine or other power. Besides the general operations of planing, rebating, mortising, sawing in curved, winding, and transverse directions, he completed, by way of example, machines for preparing all the parts of a sash-window and of a carriage-wheel, and actually showed these and other machines in a working state in 1794 in London.

This led to his appointment as Inspector-general of Naval Works, for the purpose of introducing these and various other machines into the royal dockyards, which he immediately set about effecting. From this time (1797) the introduction of machinery for the preparation of blocks and other works in wood at Portsmouth, Plymouth, and other Government establishments, takes its origin. In 1802 the General received a most powerful and efficient auxiliary in the person of Mr. Brunel, who in that year presented his plans for the block-making machinery. His services being immediately secured, and Mr. Henry Maudslay engaged for the construction of the mechanism,

the admirable series of machine-tools were finished and set to work in 1807, by which every part of the block and its sheaves are prepared.

The completeness and ingenuity of this system, the beauty of its action, and the novelty of the forms and construction of the whole of the mechanism, excited so much admiration, that the whole of the machinery in Portsmouth dockyard has usually been popularly ascribed to Mr. Brunel alone. It must not be forgotten, however, that much machinery for the performance of isolated operations had been previously employed, as well by Mr. Taylor of Southampton, the contractor for the blocks of the navy previously to 1807, as by General Bentham himself in the dockyards.

At this distance of time it would be impossible to discover the exact shares of merit and invention that belong to Brunel, Bentham, and Maudslay, in this great work. To the first we may, however, assign the merit of completing and organising a system of machine-tools, so connected in series, that each in turn should take up the work from a previous one and carry it on another step towards completion, so that the attendant should merely carry away the work delivered from one machine and place it in the next, finally receiving it complete from the last.

Some of the individual machines in the series had, it is true, been previously contrived and employed. Thus, the self-acting mortising-machine is distinctly described in Bentham's specification of 1793, so completely as to entitle him to the full credit of the invention of mortising-machines, whether by the process of boring a hole first

and then elongating it by a chisel travelling up and down vertically, or by the process of causing the hole to be elongated by the rotation of the boaring-bit during the travelling of the work. The same specification describes boring-machines, some of which are similar in their arrangements to those of the block series; also the tubular gouge, which is employed in the shaping-machine, and the formation of recesses, by a revolving and travelling tool for the inlaying of the *coaks*.

One of the most useful machine-tools that made its appearance at the end of the eighteenth century was the *circular saw*. This had been applied to cutting metal on a small scale, as in the cutting-engine, ever since the time of Dr. Hooke; if, indeed, these early examples were not more like circular files than saws. Where or by whom the woodcutter's saw was put into the form of a revolving disk has not been recorded. It found its way into this country about 1790, some say from Holland, and was employed at Southampton and elsewhere in wood-mills. Bentham greatly contributed to the practical arrangements necessary to give it a convenient form. He describes and claims the bench now universally used, with the slit, parallel guide, and sliding bevil-guide, and other contrivances.* Brunel introduced a variety of ingenious and novel arrangements, as well as the mode of making large circular saws of many pieces.† Mr. Smart also contrived a series of sawing-machines for making canteens, cutting tenons, &c.

After the completion of the block machinery, it becomes

* 1793. Repertory, vol. x. p. 293. † Patent, 1802.

very difficult to trace the subsequent improvements. The art of machine-making for working in metal was gradually advancing, but is not recorded in patents, and very little described in books. The slide-rest principle was extended, large self-acting lathes constructed, and boring-machines of great precision and improving structure were called into existence by the necessity for extreme accuracy in the cylinders of steam-engines. The best engravings of the machines of this period are in "Rees' Cyclopædia," and in the volumes of the "Transactions" of the Society of Arts.

No greater proof of the obscurity which hangs over the history of machine-tool making, in the first half of this century, can be given, than the unknown origin of the planing-machine for metal. The machine which Nicholas Focq contrived in 1751, which has been called a planing-machine, has no title to the name, or any resemblance to the modern engine. It is nothing but a heavy scraping-tool, which is dragged along the bar upon which it is to operate, and rests upon it, pressed into hard contact with it by strong springs. It will, therefore, smooth the surface, and remove small irregularities, as a carpenter's plane does with a board, but it will not produce a correct plane surface, or even make successive cuts. It is a mere *plane*, and not a *plane-creating engine*. Neither could the machines patented by Bentham in 1791, and Bramah in 1802, for planing wood, although real planing-engines, have suggested the engine in question, for their properties and arrangements are wholly different. The engineers' planing-machine made its way into the engineering world

silently and unnoticed; and some years afterwards, when its utility became recognised and men began to inquire into its history, various claimants to the honour of its invention were put forward. We can only learn that, somewhere about 1820 or 1821, a machine of this kind was made by several engineers. Messrs. Fox of Derby, and Roberts of Manchester, appear amongst the number, and the forms which they gave to the engine have remained permanent. Mr. Clement has also been mentioned, as well as others. It is clear that the inventors were not at all aware of the immense importance of their work, but experience has proved the utility of this machine to be so great, that it may be pronounced the greatest boon to constructive mechanism since the invention of the lathe. Nevertheless, no drawing or description of the planing-engine is to be found in any English book until 1833, when the Society of Arts published beautiful engravings of Mr. Clement's machine; the complexity of this, and the unfortunate arrangement of the bed, which he mounted on wheels, has prevented it from being adopted. The French and other Continental mechanical journals, much earlier began to give engravings and descriptions of the English planing-machine. In 1829 the "Industriel" has one of the simplest, and the Bulletin of the "Société d'Encouragement," the collections of Le Blanc, Armengaud, and others, contain engravings, not only of the planing-machines, but of the other machine-tools of all our best English makers, generally accompanied by admirable descriptions and minute details, that may well serve as models to our own writers on such subjects, and at the

same time show how much good service is rendered by the superior mathematical and theoretical education of French engineers. Be it remembered, too, that, not content with describing and analysing our machine-tools, which they do in a most liberal and admiring spirit, they also employ their generalising powers in the endeavour to construct improved forms, and with such great promise of success, that, unless we also begin to apply science to this subject, we run considerable risk of falling behind our ingenious neighbours.

The mortising-engine of the block machinery was applied by Mr. Roberts, of Manchester, to the formation of the key-ways of cast-iron wheels, and also to the paring, or planing by short strokes, of the sides of small curvilinear pieces of metal; such as cams, short levers, and other pieces that do not admit of being finished in the lathe. Thus, under the name of *slotting and paring-machine,* a new and generally useful machine-tool sprang up; and subsequently another, derived from it, has been produced, and apparently with equal success, under the title of a *shaping-machine.* It is, in fact, a planing-machine, in which the tool is attached to the end of a horizontal bar, which is moved to and fro, so as to plane, with short transverse strokes, a piece of work fixed on a complex adjusting-bed, or on a revolving mandril, so as to receive the action of the tool.

[All these and other varieties of machine-tools were, in the oral delivery of this Lecture, illustrated by models, without which, or diagrams, it would be impossible to state, in an intelligible form, the explanations of the

general principles which these machines possess in common, which must be therefore omitted in this place.]

The existence of such principles leads us to the hope that machines much more comprehensive, and yet simpler in form, will be devised for the same purposes, by means of which the construction of machinery in general will attain to greater perfection; and machine-tools be introduced into workshops of a smaller character than at present, in the same manner as the lathe.

In America, a variety of contrivances are employed in workshops to facilitate and give precision to ordinary operations: as, for example, the foot-mortising machine for wood. The earliest contrivance of this useful tool (the offspring of Bentham's mortising-engine), appears to be in a Pennsylvanian patent by John M'Clintic, in 1827,* since which the machine has got into general use in America, and has consequently been the subject of numerous patents for minor arrangements. One of these, by Page, was engraved in the "Mechanics' Magazine" (1836, vol. xxvi. p. 385), and thus introduced to English workmen; and in the last year Mr. Furness, of Liverpool, has patented some improvements in England, and endeavoured to introduce the machine. It formed a very interesting object in the Exhibition, together with other American contrivances for boring, tenoning, and such-like operations, which the peculiar conditions of that country have called into existence, by creating a market for them.

* "Journal of Franklin Institute," vol. vi. pp. 18 and 163.

In reviewing the comparatively slow progress of machine-tool making, it will appear that in this, as in other branches, steps in invention that, when once made, appear exceedingly simple and obvious, are often the most difficult to take. The chance that such steps will be made is increased by bringing to bear upon them the greatest number of heads; for the peculiar faculties or acquirements of one man, or set of men, may serve to carry on an invention to a certain point at which it is prepared for, and requires those of another set of men who may carry it further. In the old time, the exceeding secrecy and jealous care with which every new contrivance was guarded and watched, retarded the advance of machinery to an extent that we can hardly believe. Each man was working in ignorance of his neighbours' improvements, and every Art was indeed a Mystery. And not only did these difficulties obstruct the progress of machinery, but the enormous expense of constructing new machines. We know that the art of construction has undergone a complete revolution since the block machinery was made, but we can scarcely estimate the prodigious amount of labour and thought that was required to give existence to that machinery, which, indeed, could never have been effected without the resources of the nation in the then imperfect state of the art. To these retarding causes must be added the jealousies of workmen and their dislike of new methods.

I have already alluded to the advantage of promoting a more universal knowledge of each other's methods amongst the mechanists of different branches and countries.

A very interesting part of the Great Exhibition was the collection of strange-looking tools from France, Germany, and elsewhere, differing in their forms and handles and mode of operation from those employed for the same purposes by our own workmen. Without doubt some of them might afford useful hints; for example, the universal employment of the narrow frame-saw on the Continent for work that we perform with broad-bladed saws, stiffened with brass or iron backs, might lead our workmen to consider whether, after all, our practice is not carried too far in this respect.

But the facilities for working in metal, and its general introduction into all kinds of frame-work, where wood was exclusively employed, as well as the substitution of cast-iron for brass, has made it imperative upon persons of all trades, which are affected by these changes, to learn the management of these new materials, if they desire to profit by the advantages consequent upon their employment. Thus, the philosophical instrument makers formerly employed brass for their metal work, and constructed their machines, even the largest astronomical instruments, in a great number of pieces screwed together. We have now learnt that stability is best ensured by employing fewer pieces, and that cast-iron is, on all grounds, a better material than brass. But the tools and methods of working in cast-iron are wholly different, and therefore the philosophical instrument makers must turn engineers, and employ planing-machines and the like. The making of large clocks, and various other articles of common use,

must undergo the same change. It is useless to say that these men can go to an engineer's shop to get jobs done for them as required. Such a method can only lead to a partial and imperfect employment of the new resources and advantages which are to be developed. For instead of a full and complete adoption of these novelties, the use of them will be necessarily evaded in every case where they can be dispensed with, unless the master-workman can employ them freely as his own.

In machinery we have to deal with every kind of material, and to avail ourselves of the peculiar properties of all, in their appropriate places; and thus a skilful engineer should be familiar with every kind of mechanical manipulation and material, from a sheet of card paper to an iron bar, and ought to know as well how to hem a pocket-handkerchief as to rivet a boiler. It is of no use for him to employ workmen of any trade in carrying out new combinations unless he himself know how to instruct them. A musician who is about to compose a symphony need not be able to play on the violin like Paganini, or on the piano like Thalberg, but he must be well acquainted with the powers and manipulations of these and every other instrument before he can write passages that will bring out their effects and be adapted to performance. And, in the same way, a man who intends to devise and carry out a new machine must be conversant with the peculiar properties and mode of manipulating every kind of material, that thus he may select and avail himself of them to the best advantage.

And I am persuaded that one of the most important and instructive lessons which the Great Exhibition brought before us, consisted in the display and contrast of the application of different materials and different methods to identical purposes by the various nations of the universe. May we be enabled to read the lesson aright.

LECTURE IX.

PHILOSOPHICAL INSTRUMENTS AND PROCESSES, AS REPRESENTED IN THE GREAT EXHIBITION.

BY

JAMES GLAISHER, Esq. F.R.S.

JAMES GLAISHER, Esq. F.R.S.

ON

PHILOSOPHICAL INSTRUMENTS AND PROCESSES, AS REPRESENTED IN THE GREAT EXHIBITION.

"PHILOSOPHICAL Instruments and Processes, as represented in the Exhibition," form the subject of my Lecture this evening. To place you in possession of my proposed arrangements for treating this subject, you will, perhaps, permit me to speak of that which I have done as Reporter, and to present to you a brief sketch of the nature of the duties which devolved upon me, both in that capacity and in that of Juror for Class X.

My design in writing the Report was to render it such a record of the subjects included in Class X., that as the time arrived when the present generation, witness of the contents of the Great Palace, should have passed away, it should stand to succeeding generations as an authentic record of the whole collection, so classified as to kind and merit as to defy the influence of tradition either to its enhancement or detraction; convinced that by so doing I was best fulfilling the trust confided to me, the object of

which, the extension of human knowledge, could alone be achieved from the solid basis of truth.

For the further extension of human knowledge, by making the Exhibition subservient to the improvement of art, science, and industry, were these Lectures instituted at the suggestion of His Royal Highness Prince Albert. As one honoured by the selection of the Council of this Society to assist in the promotion of this honourable and important scheme, it became to me a matter of deep reflection, how, in the brief compass of a lecture, I could best contribute to its advancement, and enlist at the same time the interest of gentlemen, many of them no novices in the use of instruments and processes, of which, necessarily, my mention must be very brief. Reflection at length decided me to take you, step by step, not through the contents of Class X., but, as far as time permitted, through the novelties and improvements which they exhibited, and to set before you the fruits of examinations, which, necessarily special and confined to the few, were alone instituted for the advantage of the many. The reflections induced by the examination of works based upon the most brilliant discoveries of times, both past and present, I have been unable quite to suppress, and have combined them with my views relative to the immediate and future bearing of the Exhibition upon science, which last we are not only permitted but enjoined to express.

To carry out this arrangement I shall trespass on your patience for a little beyond the ordinary time. By placing before you, however, a true representation of the leading features of the Class we are about to analyse,—by placing,

in fact, before you a true representation of its novelties and excellencies, in the same manner as the Report, shortly to be published, will give you a true representation of its contents as they existed,—I hope that the lengthened attention you may grant to me will be repaid by the possessing you of a part of that information, which, far from being ephemeral, has only been elicited by months of examination, inquiry, and comparison, to be stored away among the scientific archives of the day, and so added to our treasury of knowledge, from which alone can we draw that clue to guide us through the unknown regions which still interpose between our knowledge of facts and their governing laws.

For the fulfilment of the duties of Juror and Reporter, two classes of investigations were required. That of Juror claimed and exacted from me the careful and unprejudiced examination of subjects, and involved a just determination of originality of construction, improvement of processes, discovery of principles, and a correct appreciation of mechanical skill; that of Reporter, a duty to which I was elected at a much later date, required still more for its fulfilment; and I found it necessary to make myself acquainted with the characteristics of each country's contributions, how far the state of science was represented by each, the causes of deficiencies, and finally to examine with care the sources both of success and failure. The result of these investigations, which for months rendered the Exhibition a vast school to me, and a means of confirming long preconceived opinions, may enable me with success to point out those novelties and improvements

which were most inaccessible to the public, and even to those with whom the gratification of curiosity was a desire, slight in comparison with that for making themselves acquainted with the peculiarities of instruments with which they were least familiar. As the subjects in the collection were, without exception, illustrations, specimens, or models of those applications of science, which are exercising so great and beneficial an influence over society and the civilized world, a few remarks upon the rise, progress, and importance of science, may not be considered an unfitting introduction to the description of the novelties and improvements in some of the products exhibited, which, combined with art and industry, it has placed at our disposal.

In the early ages of the world, man, acted upon by the common circumstances of his race, impelled by the pressure of his physical wants, and actuated alike by a principle of curiosity and the desire of gain, soon became acquainted by actual discovery with the rough elements of geography, and passing from shore to shore, acquired a knowledge of countries far separated, their inhabitants and productions, and so laid the foundation of that intercourse, which, improving as centuries rolled on, extended alike the sphere of human wants and the power for their supply. The variety of resources open to each country, by the exchange of material products, and the equally valuable interchange of ideas, soon raised the arts to a place of the highest importance, and enabled them long to maintain this rank and materially to administer to the necessities and comforts of mankind, before men's thoughts

became directed to the elucidation of those causes, with the effects of which they were daily familiar; but the time came, slowly and gradually, when the powers of science became unveiled, very imperfectly it is true, but still so far as to impress on the mind of the inquirer a conviction of its power to repay every attempt made to penetrate its obscurity.

The steps in the progress of science, however, are, though numerous, so small, and pass by so unperceived, that insensibly we are not led to wonder at that which some years back would have been considered a miracle: in illustration of which are the means of locomotion now at our command through the applications of steam power; the instantaneous communication between place and place, even to the connecting our own island with the Continent, through the agency of electricity; the discovery of electro-magnetism, and its subsequent applications, some of which I shall this evening mention; the discovery of photography, and its application to the purposes of astronomical science, and to the self-registration of natural phenomena, which, all unthought of a few years ago, but now in full activity, create no feeling other than that of admiration at the vast resources so gradually and surely unfolding to us. And when we pause to consider that the constituents of a great nation's prosperity—agriculture, manufactures, and commerce, *in their excellence*, are dependent upon science, the first upon chemistry, the second upon mechanics, the third upon navigation (itself dependent upon astronomy), we see that the repayment made by it to the sources of its establishment puts nations

in possession of an element, which, according to the culture bestowed upon it, is capable of conferring wealth, prosperity, and power.

Such being, then, the nature of the repayment made by science for the culture bestowed upon it, it remains now to show how far its own interests have been promoted by enabling the illustrious President of this Society to carry out a conception, the success of which was scarcely more desirable than necessary to the giving additional impetus to the ever, but not equally, advancing progress of science,—a conception which never before the present time could have been successfully realized; for long as it is since the free and unlimited intercourse between country and country has presented any barrier to the progress of the arts and sciences, it is only lately that through their joint instrumentality space has been so far annihilated as to permit objects, to the attainment of which a limited time must suffice, to be successfully carried through; and had it not been for the recent and rapid advance of science, the Exhibition itself could not truly have represented its existing state in all countries at one and the same time,—a representation only to be effected by the sufficing of a few months for the erection of the building and the arrangement of its contents.

The prosecution of the inquiry of how far the interests of science will have been promoted by the Exhibition brings me to the immediate subject of my Lecture, and requires that I should lead you back to the time when the Exhibition, with its multitudes, gave ample proof of the public willingness to incur both toil and expense for the

refined gratification afforded by the cultivation of intellect, —a gratification so sought by our countrymen at home and visitors from abroad, that we are fairly entitled to look for deep and lasting results.

An interchange of ideas between men of different countries has ever been esteemed valuable and conducive to the extension of knowledge; but never before the era of the Exhibition was the gathering together men of all nations, and different pursuits, contending interests, views, and feelings, for its acquisition from one grand source, for a time made common to all, ever resorted to as a means to its further extension. Thousands of our countrymen have visited the collection of Class X., having seen for the first time instruments of which they may have read, or only heard, and therefore never clearly understood, and have returned home with increased knowledge and new ideas; regulated in kind by individual bias, but dependent in amount and value upon the circumstances of education, mental capacity, and social position. Of visitors from abroad, the same mixture of classes was not to be anticipated, and experience has shown that the majority of foreign visitors were possessed of more extended information than the average class of their countrymen,—information rendered valuable to us in proportion to its amount, and the facilities obtained by them for its diffusion; these must have been great, for practical scientific men were brought into contact with practical working men of their own and other countries, and men of science, both at home and from abroad, gathered to the Exhibition as to a common centre.

The benefit to the humble and working classes of the community we may fairly expect to be great. For the first time has been placed within their grasp a knowledge of what has been done, what is doing, and by whom,—a knowledge necessary to the prevention of the useless repetitions which have so often engaged the attention of the ingenious mechanic, who, ignorant that he is doing that which has long been successfully performed, sustains a real injury, whilst the talent and industry possessed by him are totally lost to other causes, which, with better information, he might have successfully embraced. At present it is my opinion, that the removal of erroneous impressions, the inculcation of new ideas, and the extension of his range of knowledge from the wide field of observation so freely offered to his inspection, will serve for the base of many an ingenious superstructure, to form ultimately an addition either to art or science. In support of my views, relative to the benefit to arise from the better direction of industry, I may make mention of a case which came under my notice whilst secretary to the Greenwich Committee. A mechanic brought before me and other gentlemen, members of the same Committee, a folding joint of peculiar, and, as he thought, original construction, which he was desirous to exhibit; he had expended a considerable amount of ingenuity and industry in its manufacture, and his surprise and disappointment were extreme on being told that many similar had been made. This is a single instance out of many which could be brought forward, individually of little detriment to the cause we are seeking to advance, but collectively of more importance.

And as in order to the well-working of any scheme a strict attention to the most minute and apparently insignificant details is necessary, so, in like manner, to the carrying out the views of men qualified both by position and intellect to give direction to practical science and philosophical inquiry, is necessary the co-operation of talent and ability, which, individually small in amount, may in the aggregate be sufficient to turn the scale either of success or failure; and every step made towards the better education of the artizan is a step to secure this co-operation.

I will now speak of the benefit to accrue from the study of the instruments in their different constructions, by a higher order of minds, intent upon their practical application. In proportion as it is necessary to the interests of science that theory, observation, and experiment, should march hand in hand, so is it equally essential that theoretical and practical men of science should come into contact with each other, and both into contact with men to whom must be intrusted the construction of instruments necessary to the completion of their views. A scheme more conducive to this end could scarcely have been designed than the collection both from this and foreign countries of instruments and their makers, to receive the criticism and judgment of individuals selected from among those in whose hands could the instruments exhibited prove chiefly serviceable; thus securing competent and impartial judges of their merits. The effect of this concentration of mind, both English and Foreign, has been, and will still more be, to give direction to physical inquiry and mechanical skill, point out existing deficiencies

and their remedies, and cause the conversion of heretofore suggestive into real practical improvements; thus creating an interchange of information between nations, and so contributing to the advantage and wealth of all.

As knowledge and industrial skill are rendered permanent chiefly through the publicity given to them, so, in like manner, is necessary to the extension of discovery and the developement of principles the publicity which the Exhibition has so eminently afforded; some instances of the accelerating power of which, over the adoption of new methods and new applications, I shall this evening instance. But I will not occupy you longer with these reflections, founded, however, so far as connected with the Exhibition, upon the careful estimation of facts which have fallen beneath my own observation, and are not at all influenced by an imagination which, from my having been engaged during my whole life in elucidating results from given and assured facts, is singularly averse to all speculative suggestions.

Before proceeding farther, it will be desirable to point out how far the list of expected Philosophical Instruments has been realised. The following list is a copy of that drawn up by Dr. Playfair, and printed in the "Official Catalogue:"

PHILOSOPHICAL INSTRUMENTS.

DR. PLAYFAIR'S CLASSIFICATION.

INSTRUMENTS FOR MEASURING OF SPACE.

1. In fixed Observatories, as Transits, Transit Circles, Great Quadrants, Mural Circles, Zenith Sectors, Altarimeters, Equatoreals, Collimators, &c.

2. For Nautical Astronomy and Observations, as Sextants, Reflecting and Repeating Circles, Dip Sectors, &c.
3. Astronomical and Topographical Illustrations, as Globes, Orreries, Planetariums, Maps, Charts.
4. Optical Instruments, as great Refracting and Reflecting Telescopes, with their appurtenances, Equatoreal Motions, &c.
5. Apparatus subordinate to Graduated Instruments, as divided Object-glasses and Heliometers, Eye-pieces, Micrometers, Micrometer Microscopes, &c.
6. Survey Instruments, Topographical, as Base Apparatus, Theodolites, Repeating Circles, Geodetic Signals, Levelling Apparatus, Miners' and Prismatic Compasses, Pocket Sextants, Perambulators, Pedometers; Hydrographical, as Sounding Machines, Patent Logs, Current-meters, Silometers.

INSTRUMENTS TO MEASURE THE EFFECTS OF MECHANICAL AND PHYSICAL FORCES.

1. Mechanical, as Dynamometers, Tachymeters.
2. Mass-weighing Instruments, as Weighing Machines, Scales, Chemical and Assay Balances.
3. Density, as Areometers and other Instruments to determine specific gravity, Invariable Pendulums, Atwood's Machine.
4. To measure other physical effects, including Meteorological Instruments, as Barometers, Hydrometers, Eudiometers, Thermometers, Pyrometers, Electrometers, Rheometers, Magnetometers, &c.

Relief or Model Mapping.—Specimens of Models.

Standard Measures of Length.—Standard Bars, Standard Bar Measure.

Dividing Machines.

Balances.

Coin-weighing Machines.

Optical Instruments.—Telescope Microscopes, Optical Object-glasses for Telescopes, Solid Eye-pieces, Optical Glasses, Lenses, Prisms, Speculums, Light-houses, Heliostats, Saccharometers, Holoscopes, Spectacles, Opera Glasses, Dissolving Views Apparatus, Dioptric Prismatic Lantern, Phantasmagoria Lantern, Photographic Camera, Multiplying Cameras, Photographic Glasses.

Photography.—Daguerreotype Pictures, Talbotypes, Kalotypes, Sun Pictures.

Air Pumps.

Aerial Machines.

The following list contains a similarly classified specification of those instruments which really were exhibited, and a comparison with that of Dr. Playfair will show the omissions, and their nature:—

PHILOSOPHICAL INSTRUMENTS AS EXHIBITED.

Astronomical Instruments.—Transits, Equatoreals, Transit Circles, Altitude and Azimuth Instruments, Apparatus for recording Observations by means of Galvanic Currents.

Nautical Instruments.—Reflecting Circles, Sextants, Sea-lead, Self-detector Compasses, Aquatic Velocimeter.

Surveying and Levelling Instruments.—Transit Theodolites, Theodolites, Repeating Theodolites, Miners' Theodolites, Surveying Cross, Levels and Levelling

Apparatus, Beam Draining Levels, Levelling Protractor, Miners' Compasses, Astronomical Compasses, Diastimeter (Distance Measurer).

Magnetism.—Magnets; Application of Electro-magnetism to the Movement of Machines.

Electricity.—Electric Telegraph, Domestic Telegraph, Chemical Apparatus.

Meteorological Instruments.—Self-registering Meteorological Apparatus, Barometers, Thermometers, Anemometers, Typhodeïciton or Storm Pointer, Pirometers, Dynamometers, Tide Guages.

Drawing Instruments.—Proportional Compasses, Cases of Instruments, Planimeter, Graphic Telescope, Protractors, Pentagraphs, Parallel Rulers, Sectors.

Orreries, Planetariums, Astronomical Machines, Dialling Globes, Calculating Machines, Instruments for the Blind, Miscellaneous.

APPLICATION OF MECHANICAL AND PHYSICAL SCIENCE TO USEFUL PURPOSES, not included in any of the preceding or subsequent Sections.

1. *Mechanics.*—
   - *a* Stereo-Mechanics
   - *b* Hydro-Mechanics

   } When not included in Sections describing their more extended uses.

   c Pneumo-Mechanics; Air-Pumps — rarefying and condensing; Diving Bells; Air Balloons, &c.

2. *Sound.*—(Not including Musical Instruments.)
   - *a* Instruments to assist Hearing.
   - *b* Alarums; Bells.
   - *c* Models of Acoustical Buildings, &c.

3. *Light.*—Instruments to assist Vision,—as, Smaller Telescopes, Opera-glasses, Spectacles, Microscopes, Lenses, Mirrors, Signals, Visual Telegraphs, Lighthouses, Optical Illusions, Gas and Solar Microscopes, Cameras, Photography, Polarization of Light, &c.
4. *Heat.*—Apparatus for producing Heat, for Freezing, Thermostats, Burning Lenses, and Mirrors, &c.
5. *Magnetism* and *Electricity.*—Mariners' Compasses, Electric and Electro-magnetic Telegraphs, Electric Light, Applications of Electro-magnetism as a Motive Power, Therapeutic Applications of Electricity, Electrotype, Apparatus and Specimens, &c.
6. *Chemical and Pharmaceutical Apparatus.*
7. *Miscellaneous.*

INSTRUMENTS TO ILLUSTRATE THE LAWS OF MECHANICAL AND PHYSICAL SCIENCE.

1. *Kinematics.*—Instruments to exhibit and describe Motions and their Combinations; Compasses, Pentagraphs, Instruments for describing Elliptical and other figures, &c.
2. *Mechanics*, or Instruments to illustrate the *Laws* of Static and Dynamic Forces
   a Stereo-mechanics; as for illustrating Mechanical Powers, Accelerated and Retarded Motion, Equilibrium and Parallelogram of Forces, Levers, Cathetometers, Centripetal and Centrifugal Forces, Elasticity, &c.
   b Hydro-mechanics, as Instruments to illustrate the Motion and Impinging Force of Waves, &c.

c Pneumo-mechanics, as Apparatus connected with the Air-pumps, &c.

3. Instruments to illustrate the Laws of Corpuscular Forces, as Whitworth's Planes; Endosometers.
4. Instruments to illustrate the Laws of Sound.
5. Instruments to illustrate the Laws of Light.
6. Instruments to illustrate the Laws of Heat.
7. Instruments to illustrate the Laws of Electricity, including Voltaic and Thermo-electricity, Magnetism, Electro-magnetism, Magnetic Electricity, Dia-magnetism, &c.

Many of the omissions are easily accounted for. More than one of our best opticians were averse to exhibiting at all; and when, finally, they did exhibit, sent such instruments as were most easily procurable, and which could be most conveniently sent. It was not to be expected but that the Exhibition, in its infancy, would have to contend with reluctance on the part of those whose contributions must, by their nature, be costly, and easily deranged, either by exposure or by transmission from place to place; but, as the undertaking progressed, and its success became assured, this reluctance was, in many cases, overcome by a conviction, that the benefit to be derived from exhibition would counterbalance the possible deterioration of the contribution, though the willingness to exhibit induced by this conviction, in several cases, came too late to be made available. All these considerations, among which the portability of the instruments was one of great importance, influenced greatly the extent of the collection from foreign countries, forming altogether a combination

of circumstances, the existence of which should prevent our entertaining any feeling of surprise, though we may be permitted to express one of disappointment, at the difference plainly observable between Dr. Playfair's list and my own specification of subjects actually exhibited.

The same causes joined to the many and contending interests of those, particularly of our own country, who did exhibit, operated to produce other results. Many were impelled to exhibit from the opportunity afforded them of taking a recognised step in advance of their former position, by contributing some novelty, improvement, or specimen of good workmanship, the highest effort of their productive skill; others exhibited in a purely commercial point of view, and sent collections of shop goods calculated to attract the attention of the undiscerning part of the public, more intent upon the possession of a cheap and attractive, than an essentially good instrument. Some few were actuated by a desire to preserve undiminished to our country the credit due to her philosophical instruments and their makers, and so furnished to the public an opportunity of inspecting instruments, too valuable, and in their use too exclusive, to be often so exposed; for in the practice of an observatory, in the use of balances, in the measuring rods of a survey, the standard measures of length by which they are determined require a seclusion, the object of which would be totally defeated by the admission of the general public to the inspection of the instruments so in use. It must, however, be clearly understood that the instruments as collected did not truly represent the existing state of science.

Since, in the Report, I have included such reflections as presented themselves to my mind at the time of writing, and when the instruments were all collected, those I shall speak of to-night will chiefly be the result of reflection and experience since the close of the Exhibition. In following out my proposed arrangement, I shall adhere as much as possible to the order observed in the Lists and in the Report; and as the subjects are numerous and varied, I must be permitted to pass without comment from one to the other, however differing in their objects and arrangements. According, then, to the order of classification, Astronomical Instruments claim our first attention.

Astronomical Instruments.

That large astronomical instruments should be much represented in the Exhibition was not to be expected, and particularly from distant lands; their removal is at all times hazardous, and equally injurious, probably, would have been their exposure for any length of time: hence we find that, with the exception of the large equatoreal by Ross, there was not one; and in this case, the divided circles, or delicate portions, were not large. This instrument was principally remarkable for its solidity, good distribution of strength, and fewness of parts. It was furnished with clock motion, and was a fine specimen of engineering casting.

As regards the instruments exhibited by Simms, they were distinguished, not only by excellent workmanship, but also for new contrivances, greatly facilitating observa-

tion; and, when it is considered how many men of a high order of mind have devoted themselves to the construction of astronomical instruments, any decided improvement indicates a very high order of merit: some of these improvements I will enumerate.

To two equatoreals exhibited by Mr. Simms, he has adapted their equatoreal axes for the application of a level, and thus greatly simplified their adjustments, besides making them more useful instruments. To one of them was applied a clock-work motion, by means of which the motion of the telescope was made to counteract that of the earth, thus enabling the observer to look upon a moving object as though it were not moving.

To an altitude-and-azimuth instrument, a telescope furnished with spider lines was placed in the centre of its azimuthal axis, for the purpose of acting as a central collimator and constant referring point.

Another novelty was the conversion of the axis of a transit instrument into a telescope, thus affording a ready means of examining the form of its pivots, as well as readily adapting it to the observation of stars, both in the meridian and in the prime vertical.

To a small transit circle, furnished with one lamp, was shown a mode of illuminating the divisions on the micrometer head, on the limb and the field of view, in such a way that the observer should have complete power, either over the illumination of the entire field, or of the wires alone, the field itself being in darkness. The observer is thus enabled to record the position of a star whose light is so feeble that the amount of light merely sufficient to

illumine the field is more than enough to drown that of the star. It is, in fact, an arrangement by which our optical power is increased by our present optical means.

It would be well to dwell for a few moments on the different modes of illumination. As you all know, the field of view in the telescope of an astronomical instrument is furnished with a system of one or two horizontal, and of five or seven vertical wires, as shown in the annexed diagram, which exhibits the appearance of the field of view when under full illumination, and when the wires only are illuminated.

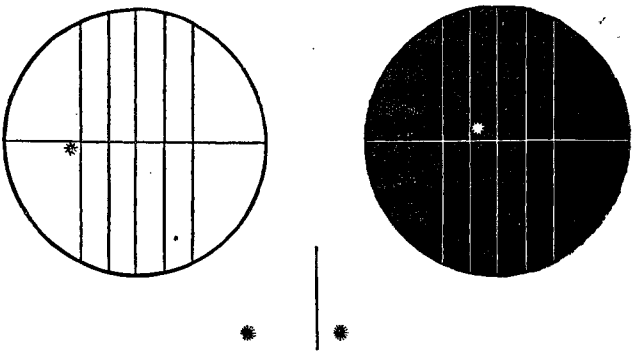

An "observation" by an instrument placed in the plane of the meridian consists in directing the telescope so that the star is bisected by the horizontal wire (to determine its north polar distance), and by noting the times at which it passes the several vertical wires (to determine its right ascension); these times being determined by mentally dividing into ten parts the space traversed by the star in one second, and deciding that tenth of the second when

it crossed the wire, as shown in the example subjoined to the above diagrams.

As there are but few object-glasses large enough to show many stars during the day, it is necessary that the field of view be illuminated in order that the wires be distinctly seen at night. This was done formerly by placing a small oval reflector in front of the object-glass of the telescope,—a plan not only objectionable on account of some part of the aperture being cut off, but because, on change of altitude, it was necessary to re-arrange the distant lamp or candle, so that the light should fall properly upon the reflector for convergence to the wire-plate of the telescope, as shown at *c* in fig. 1 of the annexed diagram.

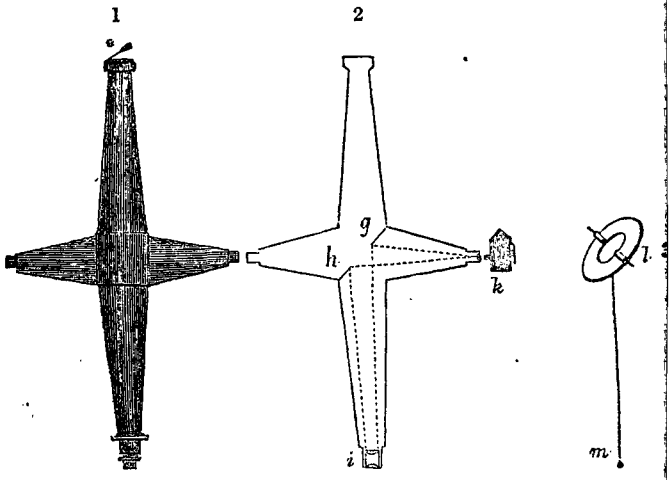

The introduction of a diagonal reflector, placed within the axis of an astronomical telescope at an angle of 45°, was a very great improvement upon the preceding method,

the light in this case passes from a lantern, *k*, placed near one of the pivots of the axis upon which the telescope turns, perforated to receive a convex lens: by this arrangement, the rays of light, after crossing, diverge upon and are spread over the surface of the reflector, *g h*, by which they are turned at right angles, and are thus made to illuminate the field of view.

The degree of illumination necessary is dependent upon the brightness of the object, and hence the necessity for a means of varying the amount of light; this has been effected in various ways, such as, by turning the lantern out of the direct line of the axis, by introducing an adjustable aperture between the lantern and the perforated end of the pivot, or by placing an expanding diaphragm between the eye-piece and the diagonal reflector. But Mr. Simms has effected all this much more simply and effectually by giving motion to the reflector itself, which is made to turn upon pivots (as shown in figure 3), by means of a rod proceeding from it, *m*, and terminating beyond the tube of the telescope, at or near the eye-piece, and consequently near the observer's hand. By this means, the maximum illumination is given when the reflector is situated at an angle of 45° from the axis of rotation and the optical axis of the telescope, the whole of the light being reflected perpendicularly upon the diaphragm; but if the reflector be turned to that position which is parallel to the axis, no light whatever is reflected from it. It is therefore evident, that between these two positions all degrees of illumination can be obtained. But there are some objects, such as comets, nebulæ, small planets, and stars, which are

visible only when all light is excluded from the field. To ascertain the position of such objects was one of great difficulty; the means usually adopted were, the insertion of very thick bars of metal in the wire-plate or diaphragm, instead of fine wires, and in observation to hide the star behind the horizontal bar to determine its north polar distance, the times of its disappearance behind the several vertical bars being noted to determine its right ascension: but such observations were little better than guess-work, and were very unsatisfactory. Another method, certainly much better, has been employed, the object of which was to illumine the wires, only leaving the field in darkness. This was done by opening a channel in the tube, nearly in the plane of the diaphragm, through which light was admitted from a lantern generally attached to the eye-end of the telescope. This arrangement, though certainly much better than the preceding, was open to grave objections, and leads me to the last improvement exhibited, which answers admirably, inasmuch as it places the degree of illumination under the command of the observer, who can instantaneously alter it in such a manner as the case may require.

This very great improvement is effected by the attachment of one or more prisms to the adjustable reflector, in such way, that when the reflector is in the position to reflect the largest quantity of light in the direction of the optical axis of the telescope, and consequently to fill the field of view with light, the prism is out of action; but that as the intensity gradually diminishes as the reflector approaches to that position parallel to the axis where no light is reflected, at that instant the prism takes up the

middle pencil of rays proceeding from the lamp, and reflects it to another prism situated in the plane of the wire plate, by which it is finally reflected, and illuminates the wires only, leaving the field in darkness, so that the observations of an extremely faint object can be as easily obtained as those of a bright one. This arrangement is explained in the following diagram.

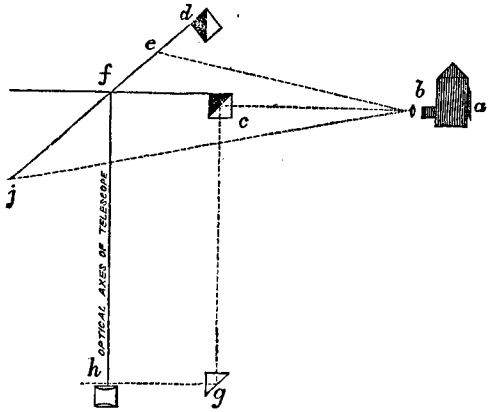

Let *f d* and *f c* represent the (axis of) moveable reflector in its two extreme positions, viz. that in which it reflects the maximum quantity of light, and that in which it reflects no light whatever; *h*, the diaphragm upon which the cross-wires are fixed in the focus of the eye-piece; *g*, a prism so placed as to reflect upon, and diffuse over the diaphragm, such rays of light as enter it in the direction *c g*; and *b e*, *b c*, *b j*, rays of light proceeding from the lantern *a b*.

When the reflector is in the position *f d*, the rays *b e*,

b j, are reflected in the direction of the optical axis of the telescope, and consequently fill the field of view with light, and give the appearance shown in the first diagram (p. 341).

As the reflector approaches the position *f c*, the intensity of the light gradually diminishes, and when the position *f c* is attained no light whatever is reflected; at this instant the prism *d*, which has dropped from *d* to *c*, takes up the middle ray, *b c*, and reflects it to *g*, causing the field of view to assume the appearance shown in fig. 2 of the diagram (p. 341).

Mr. Simms exhibited a diagonal transit instrument, of the same form as that so much used on the Continent; in this construction the cone of rays which pass from the object-glass do not proceed directly to a focus, as in the ordinary telescope, but are reflected by a prism or speculum placed within the axis, and form an image in one of the pivots, in which also the wire-frame and eye-piece are placed, as shown in the annexed figure.

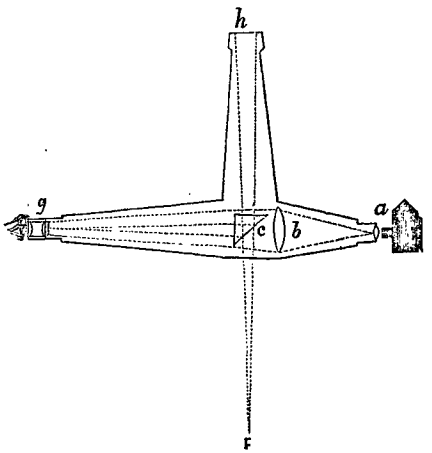

In this form of instrument the cone of rays transmitted by an object-glass, *h*, instead of proceeding to a focus at F, are intercepted by a prism at *c*, and reflected to *g*, where an image is formed upon the diaphragm in the focus of the eye-piece.

The advantage possessed by this form of instrument over that ordinarily used is, that the observer is seated with all ease at his instrument, and has no change of position to make, whatever may be the altitude of the object under observation; the serious objection to its use has hitherto been the defective means obtained for illuminating the field of view, as was to be seen in the instrument shown by Ertel in the Exhibition, where the old method was still adhered to, viz. placing a small diagonal reflector in front of the object-glass, as shown in diagram 2, a plan to which there are many objections: 1st. The difficulty of throwing light at all upon the reflector; 2dly. The trouble of re-adjusting it for every change of position; and, 3dly. Part of the object-glass is cut off. In the instrument exhibited by Mr. Simms, he has most ingeniously overcome these difficulties by introducing in the other pivot a convex lens, *a*, and at the back of the prism a second convex lens, *b*, the diameter of the latter being such that three segments of it project beyond the sides of the prism, *c*. In this arrangement the rays of light from the lantern, first converged by the small lens, after crossing, again diverge and fall upon the larger lens, by the refractive power of which they again suffer convergence and are diffused over the field of view, *g*.

Germany furnished a portable universal instrument by

Ertel and Sons: this was a beautiful instrument, intended by its maker to combine the greatest possible simplicity with the greatest possible firmness; its clamps were applied in all cases to the centre, to prevent the bending of the spokes or affecting the figure of the circle. The work of this instrument in every respect was found to be very good, the divisions were fine, clear, and distinct.

A portable equatoreal, of good workmanship, was forwarded by Merz, of Munich, who, by not forwarding a more original and valuable instrument, did not do justice to himself or German work, which was not properly represented in the Exhibition, for Germany by no means put forth her strength.

The divisions on both these instruments were fine specimens of hand-dividing; and when it is considered that this operation requires the operator to be in a darkened room for weeks together, involving close application, of a most hurtful nature to his health, it is with much satisfaction we find that, beautiful as the divisions on Simms' instruments were found to be, they were the work of his self-acting dividing engine, and that the whole of the operations of dividing and cutting were performed by machinery, independent of any personal superintendence after the preliminary arrangements were completed. The application of this machine materially lessens the expense of instruments, thereby placing the pursuit of science more in the power of those who, earnestly wishing to be useful, could not with prudence incur too large an outlay in the purchase of instruments.

It is remarkable that not a single astronomical instrument was furnished by France.

I must for a moment be permitted a digression, in order to complete my description of the novelties exhibited in this section.

In the year 1800, Volta discovered that voltaic electricity was generated by the immersion of two metals in an acid, which acted on one of them: in 1820, Oersted linked together the sciences of electricity and magnetism, and proved that the one acts upon the other, not in straight lines, as other forces do, but in a direction at right angles: so that, if bodies be invested with electricity, they possess a tendency to place magnets in a position at right angles to themselves, whilst, on the contrary, magnets have the effect of placing bodies conducting electricity at right angles to themselves, and, consequently, an electric current exercises a magnetic action at right angles to its own direction: if, then, a wire be coiled in a spiral form, and electrified, it becomes a magnet; and if within this coil be placed a core of soft iron, which has the effect of concentrating its power, it becomes a very powerful magnet, and by making and breaking its connexion with a galvanic battery, thus alternately making and destroying the action of magnetism, we can instantly unmake this magnet and obtain a moving power, which it is evident, when once produced, is capable of application to many purposes by suitable mechanism.

The Americans, with their characteristic energy, have extensively used these physical laws in their electric telegraphs, and have also applied them to astronomical pur-

poses, and to the determination of the difference of longitude. In the American department, No. 37, Bond exhibited an apparatus for observing transits by means of a galvanic circuit. It consists of a break-circuit-clock, battery, wires, and a cylinder, around which paper is wrapped. This cylinder is mounted on a delicate axis, furnished with friction rollers, and revolves once in a minute; the circuit is broken and restored by the seconds pendulum, so that 60 seconds are recorded on one line: there are 60 lines on each sheet of paper. The armature of the electro-magnet carries a glass pen, supplied with ink from a small reservoir, and the records are made as the paper revolves under this pen.

In ordinary transit observations the observer takes a second from the clock-face; counts the beats whilst the object passes the wires; records these times by the clock to the tenth part of a second; writes them in a book, still counting the beats of the clock; and after the transit of the last wire, continues counting on till he can look at the clock-face: but, in the new method, the coincidence of the wire and the object is noted, at which instant a key is touched with the finger, this touch causing an impression to be made on the recording apparatus,—of a dot if the touch be momentary, of a series of dots separated by equal spaces, if the intervals of time between successive touches be equal, as shown in fig. 1 of the annexed diagram; of lines of different lengths, if the times of pressing the key be variable, as shown in figs. 2 and 5; of equal lengths, if the times be of equal duration, or at equal intervals, as shown in figs. 3, 4, and 6. In this manner may be gene-

rated a series of dots, lines, and blanks of all varieties of lengths.

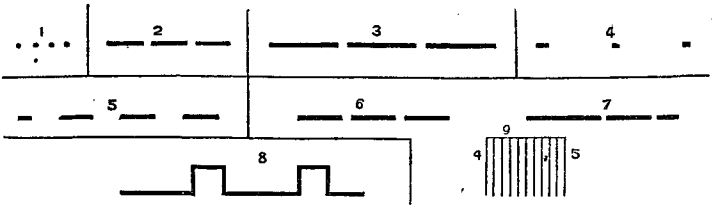

Lines of equal length, or spots equi-distant, may be registered by the movement of a clock alternately making and breaking the circuit, as well as by the finger of the operator; and lines as in figure 3, or spaces in figure 4, may be made, corresponding to intervals of one second, and thus the clock be made to mark seconds of time. If, then, an operator should make contact at the instant of the occurrence of any phenomenon, as that of a star passing a wire, one of these spaces would be broken, as is shown in figure 7; and it is easy to estimate the tenth of a second at which the contact was made, and hundredths of a second may be estimated by the use of a transparent scale, as in fig. 9, whose length, just equal to that of one second on the paper, being divided into ten parts, and made to cover the whole second, as in fig. 9, where the register appears between four seconds and five seconds, it is seen at a glance that the occurrence happened between four seconds and seven-tenths, and four seconds and eight-tenths of a second.

The apparatus exhibited registered an unbroken line, as shown in fig. 8, but the principle of operation is the

same. There may be many different modes of recording. In practice, the recording apparatus may be either near to the observer or at a great distance; either at a few yards or at a thousand miles.

In the former method, the eye and ear are brought into play; and in the latter, the eye and hand. The question is, whether there be a closer connexion between the nerves of the eye and the ear, or between those of the eye and the finger. The latter operation seems to be the more simple, inasmuch as the observer has not to listen to a clock, and to write down one time whilst he is counting another.

The practicability of thus recording observations is placed beyond a doubt, by such having really been recorded in America, at Washington, and other places, and apparently with greater accuracy than by the old method.

As before remarked, the recording surface may be at a great distance from the observer, so that the galvanic telegraph is obviously applicable to the determination of differences of terrestrial longitudes, by connecting one station to another far separated by means of a wire; but it becomes imperatively necessary to ascertain whether the time occupied by an electric current traversing the wire be appreciable or not, and whether it really passes from station to station in less time than human means can detect. Experiments to determine this have been made on the long lines in America; and the last results I have seen show that the electric current passes through a copper wire at the rate of about 12,000 miles in one second; and, consequently, that the time occupied in its progress

is an element to be taken into account in determining longitude.

As in some measure connected with this subject, I may mention that Mr. Shepherd exhibited an electro-magnetic clock, which, as an application of electro-magnetism, of great merit and promise, deserves commendation: as a clock, it does not fall within my prescribed limits; the subjects of horology, which, at first, were an integral part of Class X., being subsequently withdrawn from the adjudication of the Jurors of this Class.

The pendulum of this clock was kept in motion by impulses received from a remontoir escapement, wound up by an electro-magnet. By the vibrations of this pendulum, the circuit of a galvanic battery was completed through the coils of the electro-magnets, which were thus caused to alternately attract and release their respective armatures. The motion thus obtained was transmitted to the wheels by a peculiar form of click and ratchet escapement, invented by Mr. Shepherd, by which means the escape-wheel was locked and prevented from turning by the action of the wind upon the hands, the minute-hand being sixteen and the hour-hand twelve feet in length. The quantity of wire employed in this clock was 25,000 feet: with this great length, eight pairs of Smee's batteries, of small size, immersed in half-pint jars, were found to be sufficient for two months.

Nautical Astronomical Instruments.

Of Nautical Astronomical Instruments, the Exhibition did not furnish many illustrations: those in the English

department, by Simms, were sound and well made; and so, in a less degree, were those furnished by France, which were mostly made after Simms's model. Belgium furnished several instruments, which were good in all respects; Russia sent the two largest in the Exhibition, both well made.

Of ordinary Nautical Instruments, the American department furnished a fine collection by Ericssen, mostly of a new construction; also a very ingenious compass by St. John. The peculiarity of this instrument consists in the addition of two small magnets, moving freely upon fine points attached to the compass-card, near its east and west extremities.

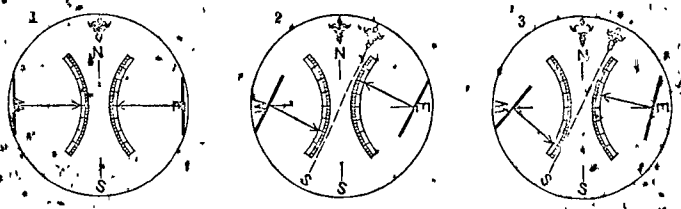

To the centre of each small magnet, and at right angles to it, is placed a brass indicator, which points to the *centre* of the card when *not* under the influence of disturbance, as in fig. 1; and *from* the centre at other times, as in figs. 2 and 3. The deviation from the centre indicates the amount of disturbance, which, if local, is shown by the one of these indicators pointing farther from the centre than the other, as in fig. 3. The amount of these deflections is measured by semicircular scales fixed over the centre of the card.

Levelling and Surveying Instruments.

Instruments for levelling and surveying were furnished from England, France, and Belgium: generally well made, but not exhibiting any novelties or excellencies. Germany furnished several, all well made, in which Breithaupt's useful method of covering the divisions with a thin plate of brass, for the purpose of protecting them from dirt, oxidation, and mechanical injury, was generally adopted. Breithaupt himself exhibited a level, with a contrivance for greatly facilitating its adjustments, and of great importance while surveyors continue to assume that the circular collars of a level are equal. It is described in the Report.

The Imperial Polytechnic Institution of Vienna exhibited some beautiful surveying instruments constructed under the direction of Professor Stampfer. The greatest improvement was the means afforded for measuring a vertical angle of 8°, by which the difference of altitude between two stations, when greatly exceeding the length of the measuring staff, could be determined; an improvement of great value for work in a hilly country.

Russia furnished a well-made levelling instrument, and America (Burt, 187) an instrument well adapted for surveying new countries, particularly in magnetic districts. It is applicable to the determination of time, latitude, and magnetic declination.

Mr. Andrew Yeates, of Brighton Place, New Kent Road, exhibited a prismatic compass, of simple construction, adapted for taking both horizontal and vertical angles, and so arranged that the former may be taken,

the instrument being held in the hand,—the object, the hair in the vane, and the magnetic bearing, being seen at once: it is adapted for fixing on a tripod, and a means is afforded of repeating the observation. It is also adapted for taking vertical angles. It is independent of the magnetic needle, and can be used in districts abounding in iron.

Optical Instruments.

Let us now turn our attention to optical instruments. Respecting telescopes, though few in number, they were found to be for the most part good. France (Buron, 443) furnished one whose object-glass was of rock crystal, the performance of which, notwithstanding its property of double refraction, was found to be very satisfactory.

A new kind of glass was exhibited by Maes (France), its base composed of the oxide of zinc and borax: it was extremely clear and free from colour, and promises to be of considerable use in producing achromatic object-glasses of a very perfect description.

The Exhibition also made known a very fair attempt by Wray, United Kingdom (No. 309), to substitute a solid substance instead of flint glass, which, as a step out of the beaten path, and towards the possible revival of fluid object-glasses, is meritorious.

As you all know, crystalline bodies affect light according to their structure, and the transparency of such bodies seems to depend upon their molecular arrangement. Thus, if striæ occur in a disc of glass, or lens through which an object is viewed, it is distorted if these striæ be numerous,

and the distortion is so great that the form of the object is not recognisable; but if *very* numerous, it is not visible at all: the glass, ceasing to be transparent, becoming opaque, though still remaining translucent.

To ascertain the different molecular states of the various discs of glass and object-glasses exhibited was, therefore, a part of the duty of the Jury. The modes adopted are detailed in the Report; and, therefore, I will here but briefly refer to the results.

The object-glasses of Simms, which were chiefly of English glass, were found to be good—the definition of the object becoming improved with the increase of power. Those of Buron were good; but some exhibited by this gentleman were not tried, the tubes being wanting. A small object-glass, by Ross, was very good; but in his large equatoreal there was none. The discs of glass furnished by Maes (France), and Daguet (Switzerland), were very good; as upon the whole was the noble piece of glass exhibited by Chance, which is no less than twenty-nine inches in diameter, and weighs 200 pounds; and I do hope that the same success will attend the obtaining its achromatic companion, and that the two lenses may be worked into an object-glass. I understand, however, that Messrs. Chance and Co. are not willing to incur the whole risk of the pecuniary loss which would follow should not the high promise now held out be fulfilled; let us hope, however, that no impediment will delay the adaptation of these lenses to a telescope.

It is pleasing to find, that whilst these exertions are being made for the improvement of object-glasses, the

eye-piece also is receiving some attention. The Rev. J. B. Reade exhibited two, which he terms solid eye-pieces, from the component parts being cemented together. As one was a little over corrected, and the other a little under corrected, it is plainly possible for a perfect achromatic eye-piece to be constructed on this principle. Mr. Reade was the only exhibitor of improved eye-pieces; and it is the more creditable to him, inasmuch as it is desirable that the improvement of both eye-piece and object-glass should march hand in hand, and that many gentlemen are turning their attention to the former, but very few to the latter.

These are some of the first-fruits of the removal of the tax on glass, that great obstacle to the improvement of telescopes in this country, which prevented all attempts to produce glass adapted to the construction of large achromatic glasses, and compelled us to purchase from abroad those we needed at an enormous price. The Exhibition satisfactorily proves that, at all events, we soon shall equal both the far-famed works of Munich and Paris; and let us hope in fair rivalry to excel them.

The microscope, by the rapid advance in microscopic investigations within the last few years, has been enabled to vie in importance almost with the telescope. Since the introduction of achromatic combinations, physiological investigations have proceeded so rapidly, and our knowledge has increased so greatly upon animal and minute anatomy, that it was most gratifying to find so many superior instruments in the Exhibition. Those exhibited by Ross, and Smith and Beck, were beautiful instruments,

and far exceeded any that were exhibited in the Foreign Section; in which, that of Natchet was decidedly the best. The British microscopes were distinguished by the great amount of light obtained, the large angle of aperture, and consequent fine definition; also by the large, flat, and perfectly defined field.

Perhaps I may be permitted to mention here some few of the applications of the microscope. In a geological point of view, it displays its almost magical powers, not only in the discovering of many strata of considerable thickness, found by its means to be entirely composed of infusorial remains, too small for the natural eye to distinguish their exquisite beauty of form and structure, but it also enables us to determine to what class of animals any fragment of a bone, however small, belongs.

Any one possessed of a microscope can easily detect any adulteration in articles they purchase, by knowing the appearance of different articles when separate: for instance, in flour and bread, a microscopist can detect whether any other grain than that of wheat has been mixed with it.

The microscope and its applications (a beautiful series illustrative of which was exhibited by Leonard) are daily increasing in importance; and it is now indispensable to members of the medical profession.

There were two lighthouses exhibited, both entirely of glass, the one by Chance, and the other by Wilkins; both were furnished with large Argand lamps, lenses, and reflecting prisms. As the object of lighthouses is to transmit all the rays proceeding from the light in an horizontal direction, the reflecting prisms above and below the

light were so placed, that the incident rays on their second surface fell so obliquely, that they were totally reflected horizontally: thus those rays which would have illumined the sky and the waters of the ocean were made available to increase the equatoreal belt of light; the substitution of reflecting prisms will, doubtless, supersede the use of metallic reflectors in lighthouses generally.

Of spectacles, a large number were exhibited, distinguished only in the British portion for their various mountings, without any attempt for the improvement of the lenses themselves, as applicable to the peculiarities of vision. I beg here to be clearly understood, that I do not consider either shortsightedness, or the flattening of the eye by age, as *peculiar*. To meet such ordinary states of the eye, the glasses exhibited were ample; but I consider a malformation of the eyes, such that one eye would require one form of lens, and the other eye another form of lens, as peculiar. At the time of the Exhibition, I did not know one optician in London to whom I could refer any one so afflicted with any chance of relief: the Exhibition did not make such person known in England; but it has given the Jury an opportunity of making the want known, and gladly I avail myself of this opportunity to dwell upon it. I speak this from experience, and my personal acquaintance with gentlemen afflicted with peculiarity of vision, who in London have found no relief. Since the Exhibition, I have learnt that Simms pays some attention to these points. France furnished one exhibitor, Henri, who seems to have paid much attention to optical science and its application. I expect one of the good

results of the Exhibition will be an endeavour, on the part of some opticians in England, to meet this want.

Of instruments connected with Physical Optics there were very few; indeed philosophical instruments of this class were quite wanting in the British portion. France furnished a beautiful series, including stereoscopes, polarimeters, saccharometers, haloscopes, &c., as exhibited by Soleil. Perhaps the most useful of these instruments was the saccharometer. Light, as you are aware, when polarized, appears to be transmitted by undulations in planes, and not at all in planes situated at right angles to them. In some bodies, each of the colours composing white light is not polarized in the same plane as in ordinary polarization, but the plane for each is slightly turned round, so that the whole is spread out: this circular polarization has been beautifully applied to chemistry, and made a test in the case of saccharine fermentation of the point to which it has reached and of the quantity of sugar formed. Hence this change of direction of the polarizing plane is of great practical value, and it ought to supersede the old method by the use of the ordinary saccharometer. That exhibited by Soleil was the only one, though many of the ordinary kind were exhibited in the British section.

Meteorological Instruments.

There were a large number of barometers, thermometers, and other instruments intended for meteorological observations, but the greater part were of a very ordinary kind, and unsuited to the work intended.

Respecting thermometers (for the purpose of forming

a correct estimate of those exhibited) let me impress upon you that a good and efficient instrument must be either identical in its readings with an acknowledged standard, or its amount of deviation correctly ascertained, and applied in its use; this involves a necessity for the possession of a standard of undoubted accuracy, the nearest approach to which were the thermometers made by the Rev. R. Sheepshanks, two of which, exhibited by Simms, may be considered as the most accurate in this country. That kind of thermometer most easily rendered identical in its readings, and most amenable to correction, is of slender bore, with small bulb, and graduated on the stems itself; by such a construction the amount of error arising from want of evenness in the bore of the tube, in the cutting of the divisions, or from a want of accuracy in the determination of the zero points, may be determined, and when applied will render the instrument perfectly useful and trustworthy. These corrections, when once determined for such instruments, will remain constant; but no system of correction can restore accuracy to the readings of thermometers whose scales are ivory. Those of box-wood, a material in general use for maximum thermometers, require corrections which can be determined only by frequent comparisons with a thermometer whose errors are known, the index errors of such instruments being found to vary from day to day.

Newman exhibited his well-known set of thermometers without alteration; but the conditions of good thermometers were best fulfilled in England by Messrs. Negretti and Zambra, and in France by Fastré.

Several carefully-made instruments were forwarded by Germany.

In maximum and minimum thermometers there was nothing new exhibited, although great need has long existed for an effective maximum thermometer.

Thanks to the Exhibition, however, this want has since been supplied. One of the good working parts of the Exhibition was the bringing together the jurors and the exhibitors, and the making each acquainted with the others' wants. The jurors, in the performance of their duties, dwelt upon the wants of science, and suggested in some cases how they might be supplied; and in this case I urged upon the exhibitors the great necessity of a new instrument to supersede the one now in use for the determination of maximum temperatures, and suggested that such might be constructed, by introducing into the tube a piece of enamel or porcelain, its end towards the mercury terminated in a blunt point, or otherwise, as experiment might determine: a form of instrument which has since been successfully achieved by Barrow of Oxenden Street, and proved to be a great advance upon the old method, particularly for sun observations. But Messrs. Negretti and Zambra have invented another, of a better kind; a small piece of glass is inserted near the bulb and within the tube, which it nearly fills: on an increase of temperature, the mercury passes this piece of glass, but on a decrease of heat, not being able to repass, it remains in the tube, and thus indicates the maximum temperature. After reading it is easily adjusted. Four of these instruments I have had at work for upwards of a month, two in

ordinary observations, and two subjected to severe tests, and all have answered admirably. Hitherto every series of meteorological observations has been more or less broken by the frequent plunging of the steel index into the mercury, or becoming otherwise deranged. Messrs. Negretti and Zambra have in their maximum thermometer supplied a want long felt.

Newman exhibited his well-known barometers, the tubes of which were filled and boiled under a diminished atmospheric pressure. Mr. Newman remarks, that he has always found that mercury highly heated in glass tubes becomes oxidized, and also, that all tubes boiled under atmospheric pressure are foul. (I may observe that my experience has not led me to the same conclusion.)

Orchard exhibited a barometer very similar indeed to Newman's; but with the addition of a thermometer placed in front of the instrument, whose bulb was of the same dimensions as that of the tube.

Griffiths exhibited a barometer furnished with a crook on the top to trap any air which might be above the mercury, for the purpose of ensuring a vacuum. Negretti and Zambra also exhibited a barometer with an air-trap glass cistern, with the intention of preventing the entrance of the air: the mercury in neither of these instruments was boiled, an operation that I consider absolutely necessary.

Harris and Son exhibited several self-compensating barometers, for the approximate determination of the atmospheric pressure. They are about one foot in length, and consist of two reservoirs connected by a bent tube, the one filled with mercury, and the other with gas; the

adjacent portions of the tube being also filled with mercury and gas. There is also an arrangement for the approximate correction for the expansion of the gas from heat. An instrument upon this principle, made by Ronchetti, was tried by me some years since, and was found to give tolerably approximate readings for a time, that is, to within 0·1 of an inch either way, but ultimately failed entirely. Instruments of this kind are of little or no value. Brown exhibited two barometers, at the price of 10*s.* 6*d.* each; one such, upon trial, I found to act well: undoubtedly they were the cheapest in the Exhibition, and were better than any of the ordinary barometers exhibited.

Yeates, of Dublin, exhibited several barometers, furnished with a ready means of cleansing the surface of the mercury in the cistern.

M. Bourdon (France) exhibited barometers of an original construction, based upon the tendency possessed by a coiled and exhausted tube of thin metal to contract or elongate when subjected to variations of pressure. A description of the method of constructing one of these little instruments may not be uninteresting to you.

The form of tube adopted by M. Bourdon is not circular, but a little flattened and curved inwards, as shown in the annexed cut. The tube in use is quite exhausted of air, and hermetically sealed at both ends, and coiled in the form shown in the second figure. As the pressure from without increases upon the tube, it exhibits a tendency to exchange its original form for that shown in the third figure. If the tube be sufficiently elastic, it resumes its former figure as soon as the pressure is with-

drawn, and the variations of curvature attendant upon the increased or diminished pressure, communicated to an index moving over a dial-face, giving the readings of the barometer. According to M. Bourdon's observations it would appear that the amount of contraction or expansion

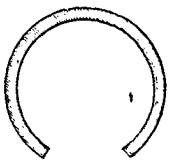

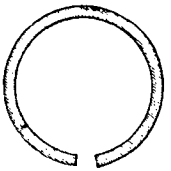

FIG. 1.

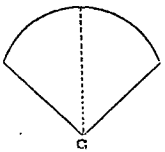

FIG. 2.

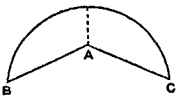

FIG. 3.

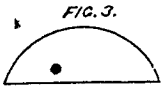

FIG. 4.

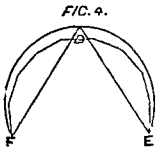

is proportionate to the sustained pressure; thus, if the two extremities of the tube become separated by the space of one inch for a pressure of twenty pounds upon the square inch, they will separate by a space equal to two inches for one of ten pounds' pressure, and so on: consequently the graduations on the dial-plate are equal throughout the scale. M. Bourdon considers that the same action which brings together each of the ends of an arc, when the chord is bent either in pulling,—as in fig. 1, or in pressing towards the arc,—as in fig. 2, is the same action as that which causes in the metal tube the variations

of figure consequent upon different degrees of pressure; and he observes, that by diminishing the pressure upon the chord at A. it will gradually relax, and both arc and chord assume the form of fig. 3,—an action corresponding in its effects with that produced by the withdrawal of the atmospheric pressure, which suffers the tube to re-assume the figure in which it was originally coiled. In reference to its amount, M. Bourdon observes, that if the pressure on the chord at A, fig. 2, be increased until it touch the arc of the circle at D, fig. 4, the angle at D is rendered more acute, and the two ends of the arc necessarily convergent, the amount of convergence being at all times in proportion to the angle formed by the two chords of the arc, the curve of the arc being modified in the same proportion. An effect of the same kind is produced by pressing the chord simultaneously on many points towards the arc, as in fig. 4, the withdrawal of pressure being accompanied by the same return to the original figure; and M. Bourdon considers that the same action is induced by the external air, which maintains a simultaneous pressure on every part of the curve. These observations of M. Bourdon in connexion with the principles which he has successfully applied, seem to me deserving of some consideration. The graduations of the instrument are determined by subjecting it to artificial variations of pressure in connexion with a standard mercurial barometer, by which means the points of coincidence are correctly ascertained and laid down. I have not had any experience of the working of these barometers, and do not expect that they are applicable to meteorological observations; but I have no doubt that

their action as steam-pressure guages is admirable. Many of these last were exhibited by M. Bourdon, in some of which the converse of the action you have just perceived was obtained by filling the tube with a gas or liquid, in which case external pressure caused an expansion or elongation, in opposition to the contraction you have now witnessed.

The collection of Meteorological Instruments in the Exhibition would lead us to the conclusion that the conditions of good instruments are better understood and fulfilled by makers abroad than at home. That this will speedily cease to be the case, I feel assured. The opportunity offered to the members of the Jury of expressing their disapprobation to the makers, added to the increasing demand for good instruments, and to the fact of the public becoming acquainted with the deficiencies of those usually furnished to them, will enforce a demand for instruments better worthy the investment of their time and money; and when we consider how worse than useless is the labour of the meteorologist when based upon bad or insufficient instruments, and how by these means he becomes instrumental to the propagation of error,—this circumstance alone demands increased care in the selection of those used. That the want of good instruments is experienced I can myself testify. For years I have pursued the subject of meteorology, and have long been convinced that a widely-spread and universal system of simultaneous observation, uniformly reduced, must be the groundwork of its establishment as a science. For the sake of this establishment, I, by my individual and unassisted exertions, six years ago, reduced my system to practice, and intro-

ducing it first among the meteorological observers, contributors to the Reports of the Registrar-General, in a short time perceived with satisfaction some of the good results upon a limited scale. The observations thus made and reduced were published quarterly in the Reports of the Registrar-General at that time. Since then I have been gradually, and with success, increasing the number of my observers, and have now established upwards of fifty meteorological stations in different parts of the country, all of which contribute observations made and reduced upon my own system. The publication of these Quarterly Reports, giving the combined results, has mainly laid the foundation of the present system of meteorology. The ready co-operation I have met with from gentlemen engaged in its pursuit has convinced me that they were only too glad to have direction given to their work, whilst the ready engagement of other gentlemen in this pursuit is equally convincing that they had waited only for a clear perception of its utility. I now come to that which had nearly caused the subversion of my scheme—the difficulty of obtaining good instruments at a fair and moderate price. To remedy this evil, to any great extent, was not in my power. Of the means possessed by me, I, however, availed myself, and have caused the construction of many barometers and thermometers superior to those previously in use. That I have been enabled to do this, is owing to the co-operation of Mr. Barrow, who, anxious for the furtherance of truth, complied with my request, and devoted his time and talents to the advancement of my views. All the barometers, and the greater part of the thermometers, scattered

among my corps of observers, have been made under my direction by him, and constitute, with few exceptions, the most efficient instruments at their command.

The establishment of my system has been followed, first, by the Ordnance furnishing themselves with twenty sets of instruments, to plant twenty meteorological observatories at their stations, and next by twenty sets which are now being prepared by Col. Sykes for as many observatories in India.

The Exhibition may be a means of contributing to the improvement of meteorological instruments generally.

The public will have been informed of those localities where the best instruments may be procured, and where, without doubt, they will enforce the greatest demand. If to the good results of the Exhibition, as applied to meteorological science, I may add my own personal influence, I earnestly exhort all gentlemen, either designing to commence, or already engaged in meteorological research, to use instruments such only as I have described as efficient, or abandon the pursuit entirely.

I will here introduce some remarks, received in a letter, a few days ago, from one of my colleagues, Professor Miller, and which bear closely upon the point in question. "Many observers have thrown away years in using bad instruments, or instruments unsuited to their particular object, not knowing the existence of instruments of a better construction, or better suited to the objects they had in view. I will begin with meteorology. Many observers use costly thermometers with brass scales, the errors of which cannot accurately be found, or with

wrong scales, the error of which is variable; for want of knowing the existence of cheap thermometers, with the scales etched with hydrofluoric acid, on the tube itself, in which the error can be determined with the greatest accuracy, and of which we had such beautiful examples, exhibited by Simms, Negretti, Fastré, and perhaps others.

"Respecting barometers, Schow discovered a remarkable law between latitude and barometric pressure; but nearly every one of the English observations was doubtful, on account of the badness of instruments and neglect of data for reducing the observations, many of the observers having used worthless instruments, in ignorance that better were in existence. I tried to verify this law of Schow's by using various English observations.

"Six years' observations in the Mediterranean, by Capt. Smyth, I reduced as far as I could; but the labour was thrown away, because the instruments did not admit of determining the errors: that is, the error was not constant.

"Professor Chevallier, of Durham, had observed with a high-priced barometer for nine years, and that an observation should not be lost, had instructed the ladies of his family to observe. He tried to obtain the constant error by comparison with a barometer of my own, of Bunton's construction. The error was extremely variable; he anatomized his barometer, and found a cistern constructed of such materials that the error mainly depended on the hygrometric state of the atmosphere.

"Observations made at Madras, for twenty-three years, by Mr. Goldingham, and printed in the East India Company's costly volume, are, for the same reasons, worth less

than nothing. Lieutenant Sullivan, R.N., made numerous observations at the Falkland Islands, which, for the same reasons, are worthless. The same observation applies to Captain Fitzroy's observations at an important meteorological station—the neighbourhood of Cape Horn.

"Visitors to the Exhibition have now seen a beautiful barometer, that gives absolute results; (Griffiths') barometer, with small constant errors; (Newman's, Orchard's) barometer, cheap, with a constant error, and not large. It is to be hoped, that after the Exhibition no observer will use, or artist make, a thermometer or barometer, except of the improved construction described above. Captain Basil Hall objected to the reflecting circle on account of the trouble of reading more than one vernier. Professor Smyth very lately complained of the difficulty of reading the vernier of a sextant, because the verniers and limb are not in the same plane. Would any body complain of the difficulty of reading verniers who had seen Ertel's universal instrument, Beaulieu's circle, Beaulieu's beautiful sextant, the Austrian Miner's theodolite, Breithaupt's theodolite, Froment's theodolite?

"The Austrian levels and theodolites give a surveyor great advantage in increased accuracy, great saving of time, and of one assistant in the use of the chain; in colonies where labour is scarce, in places where the ground is difficult, and intersected by hedges and ditches, their advantages are inestimable. In marine surveying, much time would be saved by the use of Ertel's universal instrument, instead of the clumsy transits provided by the Admiralty. Time in such cases must be measured by the

cost of maintaining a ship's crew. One instrument and one observer can with it determine time and latitude, and make any triangulites for surveying with more facility on account of the direction in which the observer looks, than with any other instrument or instruments.

"Would any observer about to fit up an observatory order any meridian instrument except such as Simms exhibited? But for the Exhibition, a quarter of a century might have elapsed before the peculiarities of the construction of that meridian circle became generally known; even that might, in my opinion, be improved by adopting Steinheil's disc of glass for the circle.

"A chemist who has seen Wollaston's contrivance for steadying the beam of a balance (Dover's balance, Nissen's balance) will not be willing to put up with the cumbrous machinery used for that purpose in many of the foreign balances. Neither will he like to use knife edges with two small agate planes, instead of a single long one in the middle, or curved instead of plane supports for the pans.

"English balance-makers may also take a lesson from the foreigners, and get rid of the too much adjustment of many of our balances. The great excellence of L. Oertling's balances appears to be in a great measure due to the unprejudiced manner in which he adopted that which was really good in the English balances, and to its skilful combination with the good points of the instruments with which he was acquainted before he came to England.

"Many persons endeavour to acquire a knowledge of the processes of research in natural philosophy and astronomy by reading books and listening to oral communica-

tions; yet their ideas remain obscure, in consequence of their not being able to see the instruments with which those researches are carried on: for in this country there are no complete collections of instruments like those of the *Conservatoire des Arts et Métiers* at Paris, and the collections to be found in the *Physikalische Kabinet* of the smallest German university. This grievous deficiency is in some degree remedied by the exhibition of Class X. For instance, many people have read of telescopes that follow the stars, keeping a star in the middle of the field as if a fixed object on land. How few have ever had a chance of seeing such a telescope! For the work of an observatory must not be interrupted for the sake of gratifying the most laudable curiosity. They are not places of education for the public. Now, the Exhibition had two such telescopes: that by Simms, especially illustrating the adaptation of the polar axis to the latitude of the place where it was to be used. But few people can see transit instruments and meridian circles, though many read of them. Many have read of extensive surveys and of measurements of arcs of meridians, of dimensions of the solar system, and the distance of the nearest stars. Elliott's altitude and azimuth instrument represents the form of the instrument used in the triangulation of the English surveys; Ertel's is the exact instrument used by Struve in the arc that is to extend from the North Cape to Crete. There were the compensated bars for measuring the bases by English observers, and specimens of linear measure to which these bars could be referred, of both kinds, *à bouts* and *à traits* (Bessel's and Sheepshanks's); both the best of

their kind. Even ordinary surveying instruments are unknown to a great part of the class of persons I allude to. Few people have an opportunity of seeing a moderately good balance. The Exhibition contained balances of the most accurate construction, 'for weights from the smallest up to 60 pounds.'"

Photography.

The collection of Photographs in the Exhibition was well calculated to show the active and experimental nature of the attempts being made to improve its processes,—an activity less observable throughout the Foreign side of the collection, which established fewer claims to excellence, on the ground of the novelty of the processes adopted, than were established on the British side. This activity was shown in part (to confine ourselves at first to daguerreotypes) in the works of Claudet, who exhibited applications of his focimeter; illustrations of the effects of the spectrum on the daguerreotype plate, as prepared by him; and pictures which, notwithstanding the loss of light necessary for the operation, were rendered non-inverting: in those of Mayall, who exhibited the crayon daguerreotype, produced by a process of his own; Beard, who exhibited enamelled daguerreotypes, in which the permanence of the picture was secured by a lacquer; in the pictures of Tyree, who claimed the adoption of a peculiar process of his own; and various others, which it would be tedious to enumerate.

The daguerreotypes exhibited by America, though not distinguished by experimental attempts at improvement of

processes, were remarkable as illustrations of the excellence of those which had been employed.

Those of France were fewer in number than might have been expected from the country which had given birth to the founder of the art, and were indicative of no superiority, except in the use of colour, over those in the British department; and were decidedly inferior to those of America. I may here observe, that the characteristics of the contents of the collections severally furnished by the United Kingdom, America, and France, were remarkably distinct: those of France were very bright, sunny, and not entirely divested of glare; those of America, which consisted almost entirely of portraits, were distinguished by a depth and harmony of tone to which those of France were totally a stranger, and, equally removed from violent contrasts and from insipidity, exhibited a degree of truth and reality only to be obtained by a close agreement with the rules of art. The characteristics of the pictures in the British department varied with the differing nature of the processes adopted, and the amount of success attendant upon their use; so much so, that the works of many of the exhibitors were in possession of a style sufficient to distinguish them without reference to the Catalogue. These peculiarities I have carefully described in my Report, and shall not now detail. It is, however, but justice to Mr. Mayall, to mention that, since writing the Report, I have become acquainted with the fact, that many of the daguerreotypes exhibited by him had been taken ten or twelve years: this fact was not detailed to the Jurors when

engaged in making their examinations, and, consequently, has exercised no influence in favour of the award which Mr. Mayall has received. It is at the same time to be regretted, that the daguerreotypes exhibited by this gentleman, all of which were executed in this country, were very many of them distributed into the American department among American works of art.

Turning to the paper and glass photography of the Exhibition, we are again assured of the activity of experimental attempts for its improvement; and here England, again eminent for experiment, was certainly surpassed by the calotypes and sun pictures of France; America was withdrawn entirely from competition; and Germany and Austria contributed to supply her place, by the exhibition of several photographs.

Before proceeding farther, it will be necessary to observe that the almost endless variety and modification of daguerreotypes and talbotypes exhibited rendered it most difficult to obtain, in each case, the nature of the process adopted; and excellence of execution, combined with adherence to the rules of art laid down for the representation of natural objects, became the safest and only criterion of merit.

The nearest approach to this standard of excellence was made by Martens, in all of whose works the elements essential to the process of the art, and to his own method, were so combined and applied, that the spectator, losing sight of the means in the end, beheld in them representations of the most perfect beauty, void of artificial effect or technical display; and the mind, impressed with the

beauty of nature's own tracings, was not for a moment reminded of the human appliances which had directed the work.

Following Martens' steps, and inferior to him alone, were Bayard and Flacheron; and following after, many exhibitors of talbotypes and calotypes, among whose works were to be perceived specimens of M. Blanquart's process for the production of two and three hundred impressions from the same negative proof: their blotty and heavy appearance was, however, destructive to a great amount of the success of the results obtained: their price was designed to vary from 5 to 15 centimes, according to their size.

In the British collection of sun pictures, some very beautiful results were obtained by Ross and Thompson of Edinburgh, upon albumenized glass; their method of distributing the albumen over the surface of the glass, and the chemical agents used for the production of the rich and varied tints observable in their pictures, I have given in the Report. Mr. Buckle, of Peterborough, contributed calotypes of great beauty, by a process of his own: Hill and Adamson, talbotypes, spirited in effect, and well-toned: Henneman and Malone, beautiful specimens, by Mr. Talbot's process, on paper; and some tinted by the application of caustic potash and a lead-salt. Mr. Owen contributed a series of calotype pictures upon paper, so prepared by him that, by its use, he has been enabled to execute in a single day, in a journey of three hundred miles, ten large-sized talbotypes. Some good photographs were exhibited by Paul Pretsch, of Austria, and a few of a mediocre kind

by the Zollverein; but they did not at all represent photographic art in their respective countries.

It is no less true than to be lamented, that this collection, the largest that has yet been brought together, and highly illustrative of the art, is by no means indicative of the existing photography in England,—a defect, the cause of which is equally lamentable with its effect. When writing the Report, I ascribed, and I think justly, much of the rapid and successful progress of photography to the comparative absence of patents in connexion with it. Since then I have become better acquainted with the restrictive influence exercised over the exhibition of photographs, how distantly soever allied to Mr. Talbot's process, by that gentleman's patent in connexion with it, and which secures to that distinguished photographist the discovery of the fact of a latent impression being made on prepared paper, and of the possibility of its developement by fresh applications of washes. This patent has been attended with great injury, though less, perhaps, than might have been expected; for having, almost, if not entirely, prevented this branch of photography receiving accessions from those to whom profit must hold out the inducement to its pursuit, it has left it almost solely in the hands of gentlemen, the results of whose experiments and investigations are constantly before the public, and who, while rapidly developing this beautiful and important discovery in its various ramifications, consider—and justly, too—that new principles, when received as truth, become the common property of mankind.

It may be observed of patents in general, that they

frequently cause many attempts to be made for the attainment of the same end by different means, and that of Mr. Talbot proves to be no exception to this rule; the chief claim upon which it is founded is the developement of the latent picture by the application of liquids. A picture, therefore, impressed in the camera, to be developed without subsequent applications, became a thing highly desirable to obtain. Accordingly, Dr. Woods discovered a process, known as the catalisotype, by which the picture impressed in the camera reveals itself when set aside in the dark, without any assistance from the photographer. This process has been used by Mr. Mayall with very successful results, but the great objection to its use is the difficulty of obtaining paper suited to the process. Very recently Mr. Robert Ellis has obtained a new process, by the use of the proto-nitrate of iron, by which the same result is obtained; the paper being very sensitive, the picture appears in a minute or two after it has been exposed in the camera, but though both these processes (one of which was called into existence by the necessity of a process different from that of Mr. Talbot's, for the purpose of geological investigations,) and various others are due to the enforcement of Mr. Talbot's patent, it is believed that the reason the French photographers in the Exhibition excelled our own was chiefly because this patent right does not restrict them. These restrictions consist in the requirement of a large sum for a license to use Mr. Talbot's process for practical purposes, or prosecution for the infringement of the patent. Under these restrictions, M. Martens' beautiful photographs are excluded from the market in this

country, and the specimens exhibited by that gentleman were withdrawn again to France, the sale of them in London being at once checked by a threat that proceedings would be instituted against him for the infringement of Mr. Talbot's patent.

Let us now be content to take a more general view of the subject, which affords a striking illustration of the germination of new principles, by showing how the groundwork of a science originated in France has been received among nations, which ever since have been silently promoting its advance and contributing to its improvement, each in a manner suited to its peculiar genius,—a germination arising out of the fact, that ever at hand are to be found talent and industry ready to receive new direction and fresh impetus in the acquisition of knowledge, which, when gathered, has rarely been garnered for the benefit of the few, but has been widely scattered for the use of all capable of, and willing to appreciate the gift, by which means the bulk of information collected from the date of the Daguerrian invention has been dispersed, to collect again with interest subservient still to its advancement. A great step towards the same end was the collection of photographs in the Exhibition, which afforded to the photologist a larger field of observation than he could have before enjoyed: many of the producing processes have long been common property, but not so their several results. The Exhibition supplied this deficiency as far as existing causes permitted, and placed the inquirer at once in possession of a class of information, which before could only have been obtained through the trouble and incon-

venience of personal introductions and mutual interchange of specimens; at the same time placing him in possession, not only of a means of estimating their relative merits, but also of emulating any one style it might seem desirable to him to adopt or improve, either of his own or other countries, the characteristics of which were severally attended with some peculiar merit or excellence. A means of studying cause and effect, such as this collection afforded to the practised photographist, can scarcely be unattended with important results; and the public, many of whom have, for the first time, seen a really good daguerreotype, will be better informed of the power of the art as applied to the purposes of representation. The imperfect application of photography was well represented in the Exhibition, and showed plainly that to please the eye, and administer to personal feelings, is the chief purpose to which a power capable of higher and more useful applications is at present applied. In my Report, I have enlarged upon its utility as applied to the purposes of art, science, and literature; but time only permits me to mention that there were no specimens of ancient inscriptions, no delineations of tropical or remote scenery (excepting Claudet's), no specimens of the actinic spectrum on chemical preparations, no magnified representations of the microscopic products of nature, no copies of ancient manuscripts, no miniatures of printed books, no specimens of scotography, or the art of copying engravings by simple juxtaposition in the dark by obscure inter-radiation, and many other applications to which it is well adapted.

Whipple, however (U.S.A., 451), by exhibiting a pho-

tographic image of the moon, has broken ground for its application to astronomy. No photographic image of a star has as yet, as far as I know, been obtained, but great would be the advantages secured, if by merely using prepared paper, the relative position of the objects in the field of a telescope could be made self-registering. I can, indeed, well conceive, that with a good working system of photography, stars, invisible to the eye, may be made to register their position with the same telescope, even looking with a black field, because, with a well-adjusted clock motion, the same object may be made to occupy the same position on the plate, or paper, for any length of time. By such a system much distressing work in searching for new objects might be avoided, and I think it is a subject which cannot be too strongly insisted upon.

Mr. Brooke exhibited his admirable system for the photographic self-registration of natural phenomena, including apparatus for ascertaining all those elements in magnetism at present considered important to investigate, and also a means of registering some of the elements necessary for meteorological investigations. Thus every change of position in the magnet is recorded; and not only is the change noted, but the peculiarities of its motion also registered. The intimate connexion existing between the aurora borealis and magnetism is ocularly shown, and also many particulars which, in the ordinary mode of observing, would necessarily escape detection. The exhibition of Mr. Brooke's system of photography to the self-registration of natural phenomena will, I am convinced, be immediately followed in different countries, and become a means of

increasing our knowledge of undoubted facts. Since the Exhibition, France and Spain have ordered the necessary apparatus, and the Jurors of other countries have also recommended its adoption.

The principle is shown in the annexed cut, in which *a* represents a part of a bar magnet; *b* a concave mirror, resting in a stirrup firmly attached to the suspension apparatus, the whole being supported by a single thread; *e* a blackened glass cylinder, wrapped round with photographic paper; *d* a plano-convex lens; *c* a lamp placed a little out of the line which joins the centres of the cylinder and magnet.

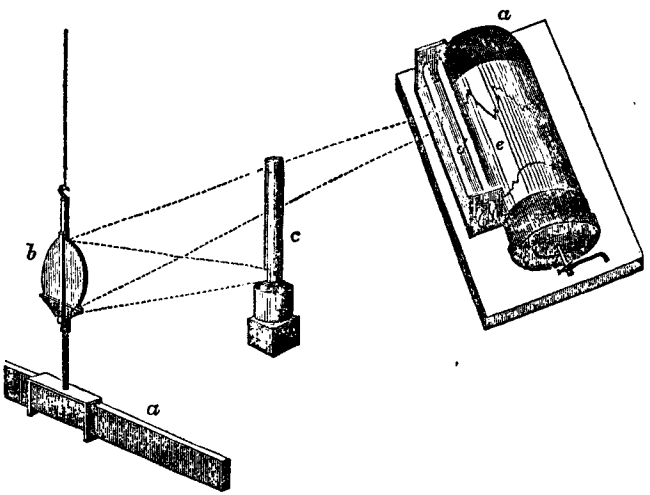

In operation, a pencil of light passes from *c* through a very narrow aperture, diverges and spreads over the mirror *b*, from which it is reflected, and diverges to the lens *d*, and is condensed into a well-defined spot of light at the

surface of the paper. The action of this spot upon the photographic paper is to leave a trace, which is, however, imperceptible, until subsequently revealed by the application of solutions.

As the whole of the suspension apparatus is firmly fixed together, the mirror partakes of every movement of the magnet, and reflecting the spot of light to different parts of the paper, according to the communicated movement, causes the photographic action created by the spot to become a record of the movements of the magnet with which it is identified.

The undulations in the trace when developed are thus in exact accordance with the deflexions of the magnet to the right and left; a period of rest, during which time the spot remains stationary, being indicated by an undeviating line, the continuity of which remains unbroken, as the cylinder is placed in gear with a chronometer, by means of the winch-iron at the end of the cylinder resting in the hand of the chronometer, forked for its reception, which revolves once in twelve hours.

Balances.

Next in order of arrangement, Balances claim our attention. The fine collection in the Exhibition included superior instruments furnished by the United Kingdom, France, Germany, Belgium, Austria, Netherlands, Sweden, Norway, and the United States of America. Many of them had never been surpassed in beauty of workmanship and in the essentials of good instruments. It may not be out of place here to mention, that the Exhibition made

known an application of voltaic action of great value, by T. H. Henry, Esq., by coating with perfect success the beams of two of the balances exhibited by Oertling, the one with palladium, and the other with platina. By this application, a derivative from the electrotype, the inferior metals are coated with the superior,—a process applicable to thermometer scales, to the limbs of astronomical and geodetical instruments, and, in fact, to graduated scales of all kinds; nor are its applications confined to these alone, it is useful in the coating of weights, instances of which are now brought before you for the first time, as well as the scale of a thermometer similarly coated (which I now present to you). Mr. Henry assures me these great advantages will not involve much additional expense. A want of many years is thus supplied, for I have been long endeavouring to bring into use some substitute to avoid silvering the scales of thermometers,—a want which has long been experienced by all who have used metallic scales, and know how soon the divisions are obliterated, and who will not fail fully to appreciate this useful application.

Calculating Machines.

Of Calculating Machines there were several (more or less perfect), by which the hand is made to do the work of the mind, and calculations requiring much strained labour are performed by merely turning a handle. In this department the name of Babbage is forced upon our recollection, and regret is experienced that his name appears not. No one who has seen his elaborate workshops, or anything connected with his calculating machine, but

must experience regret that none of his talents and labours adorned the Exhibition. Of the machines exhibited, the best was furnished from Russia, by Staffel, and was found to perform accurately and readily the simple calculations of the first four rules of arithmetic, as well as the extraction of the square root, though less readily. The next best, from France, by Thomas de Colmar, was also capable of performing the same calculations.

Electric Telegraphs.

The Exhibition was rich in Electric Telegraphs, and for the first time the public had an opportunity of inspecting their arrangements. Beyond the spreading of general information, I do not see that the collection of telegraphs will be followed by any particular advantage arising from it, because the earnestness of all gentlemen at present connected with them needs no stimulus to further exertions.

The Electric Telegraph Company exhibited their collection of varied and beautiful instruments, which, however, were not accessible to the public. The British Electric Telegraph Company's instruments were fully exhibited, and Mr. Highton was in almost constant attendance to explain them to the public. Walker, of Tonbridge, exhibited a very interesting collection, comprising in much detail the various appliances he has found it necessary to adopt to bring the telegraph on the South-Eastern Railway to that effective state in which it now is. I have already referred to the discovery of Oersted, viz. that magnetism could be deduced from electricity; this was

followed by Faraday's discovery of the converse effect, viz. the obtaining electricity from a permanent magnet, which he did by giving motion to the magnet, when he found that electricity was induced in adjacent conductors; and he it was that found the direction of electricity to be at right angles to the polar axis of the magnet, and that magnetism conjoined with motion became the source of electricity. Henley, availing himself of this, exhibited a beautiful magneto-electric telegraph, which acted well, and in which the source of electricity was in permanent magnets. I have since, in company with Mr. Walker, seen this telegraph in connexion with the submarine telegraph at Dover. J. Brett exhibited a printing telegraph, by which communications can be made in any language, and printed upon paper with rapidity and precision.

Bakewell exhibited his copying electric telegraph, by which a fac-simile of the written message is obtained. Dering exhibited many ingenious contrivances; and Whishaw, a collection chiefly interesting in an historical point of view. Prussia furnished a beautiful system of telegraphs, exhibited by Siemens and Halske. The details and peculiarities of the telegraphs exhibited I have fully described in my Report.

I cannot pass from this subject, which, if fully treated upon, would alone occupy an entire evening, without expressing my satisfaction at finding in the chair a gentleman (Mr. Cooke) to whom we are so much indebted for improvements in the electric telegraph; and fully assured are we that so long as the talents and energy of this gentleman, who, in conjunction with Mr. Wheatstone,

was the founder of electric telegraphs in England, are enlisted in its advancement, the superiority secured to England in this the discovery of the age will be neither lost nor diminished.

Electrical Machines.

Of Electrical Machines there was one only requiring particular mention—that of Westmoreland, for generating electricity from gutta-percha bands, and which gives promise of producing electricity to any amount: this, the introduction of a new motive power, opens a new field of philosophical inquiry well worth exploring.

Standard Measures of Length.

A beautiful machine of this kind was exhibited by Mr. Whitworth, for the purpose of measuring to *one millionth* of an inch. Another delicate and beautiful apparatus for the same purpose was furnished from Germany by Bauman. Simms exhibited standard bars and scales. The Conservatoire des Arts et Métiers at Paris, furnished a beautifully divided metre and various standard measures.

Dividing Machines.

Ackland exhibited a Dividing Machine, very ingeniously contrived for the division of hydrometer scales. Perreaux (France) furnished a beautiful straight-line divider.

Tide-Guages.

Of Tide-Guages there were two, both self-registering, by Hewitson and Newman: that of Hewitson was the better;

it showed both time and tide, was elegant in appearance, and seemed perfect in action.

Iridescent Films.

Mr. De la Rue exhibited various applications of iridescent films to the purposes of decoration generally. This is a beautiful illustration of the production of colour on a thin transparent surface, by the agency of light, the colours being as bright as those seen transiently in the ordinary soap-bubble. The process is performed by dropping a very small quantity of spirit-varnish upon the surface of water when tranquil, which, spreading in all directions, becomes exceedingly attenuated, and reflects the colours of the spectrum. The object immersed (paper-hangings, card-cases, &c.) is then raised slowly, in such manner that the film adheres to its surface. It is applicable to very many ornamental purposes.

Acoustics.

In Acoustics, the syrene of Cagniard de la Tour, exhibited by Watkins and Hill, was the only philosophical instrument exhibited. This beautiful instrument, in the early part of the present century, was invented by the Baron de la Tour, who, struck with the belief that musical sounds were produced by a succession of impulses striking the air, and producing vibrations, determined to ascertain whether a piece of mechanism so constructed as to strike the air with the same rapidity and regularity would also produce sounds. The instrument now in my hand was the result of this determination; its construction, which

is at once simple and elegant, I will briefly explain. The air set in motion, by blowing through this small tube, communicates motion to the circular plate, which turns upon the cylindrical brass chamber beneath. The plate within its circumference is pierced with a series of oblique and equidistant holes, and immediately beneath, on the upper surface of the brass chamber, is a corresponding series. The obliquity of the two series of perforations is similar, but reversed for the purpose of enabling the current to communicate a rotatory movement to the plate; the obliquity of the holes is in itself not necessary to the production of sound, but is a conventional arrangement to produce motion without the employment of an additional agent.

The disc is thus made to revolve with a rapidity in exact proportion to the force with which the air is impelled through the tube, and by its rapid and regular movement gives to the external air a series of shocks, which produce a sound analogous to the human voice, more or less sharp according as the current turns the plate with more or less rapidity.

The moveable disc is carefully centered in the surface of the air-chamber, by means of a slender axis working in a small orifice left for its reception, and is connected with the indexes above by a delicate cylindrical tube, terminated by an endless screw, which gives motion to a wheel furnished with 100 teeth, and bearing on its axle an index. A cog on this wheel acts upon another, whose axle likewise carries an index. For every 100 divisions traversed by the index of the wheel with 100 teeth, which corre-

sponds with the same number of rotations performed by the plate beneath, one division is registered by the other of the two indexes: an arrangement which affords great facility for reading off the multitudinous vibrations of which each sound is composed.

If water be passed into the syrene instead of air the same sounds are produced, even should the instrument be totally immersed, the same number of vibrations producing the same sound, and hence the name of the instrument.

This instrument in use, as applied to a continuous stream of air, is a means for determining the absolute number of vibrations in a second necessary to the pitch of a note, and may be set in motion by the flow of air or gas from a gasometer, or by a stream of water, as already mentioned; and is a beautiful and practical adaptation of a theory which it at once confirms, affording at the same time a key to much that is unknown in the relations existing between sound and its producing causes.

Conclusion.

Such are some of the principal novelties which were prominently brought before us, giving evidence of the advance of science, and plainly bespeaking the great effort of the age to be a seeking after facts and their relations, confirmatory of which are the earnestly-pursued investigations in magnetism, in photography, Brooke's application of the latter, the self-registering instruments of Dollond, Newman, Hewitson, and others; all of which, by compelling Nature to record her own facts, are laying up a series of undoubted worth and accuracy for future use.

It is evident that, wherever we are possessed of sufficient strength to command the services of nature to our own ends, an immense power is obtained; for one set of laws is brought into contact with a set of facts, of the governing laws of which we know nothing, and once set in motion may run parallel for a time, but may ultimately exhibit a tendency to converge actually towards each other, or, by the detection of an agent common to both, may set the germ of the theory which shall unravel the mystery we are desirous to penetrate. That knowledge which we do possess has ever been our only means for the attainment of that which we have not, and the observation of facts and their relations, with which we are daily familiar, can alone enable us to solve the causation of effects viewed at a great distance, and only to be accounted for on analogical reasoning. In by-gone times man knew no substitute for the replacement of manual exertion; work with the hammer required the employment of men, in whom muscular strength was the only capital invested: this was superseded by a knowledge of mechanics,—the law of forces, which compelled the weight to descend unerringly at the appointed time. Now a higher agent still is called into play, and the galvanic current,—a stream, subtle, imperceptible, and instantaneous,—is made to endue the ponderous iron with a still more unerring precision; and, more important still, is found linked with a power, that of magnetism, upon which other agents of nature, light and chemistry, are at work to supply materials to enable us to elucidate laws; and electro-magnetism, while supplying us with a new

motive force, gives us a means of handling the unknown power, and permits us to add experiments and practice to the slow process of accumulating observations.

From facts such as these, which plainly show the necessity of still increased attention to the culture of science, you would naturally expect that I should urge gentlemen to its pursuit. As an Englishman anxious for the maintenance of his country's prosperity, *I do;* but I cannot forbear observing, that lavish as is the repayment made by science for its culture, inadequate in this country at all times has been the repayment permitted to its followers. The lot of the scientific man has heretofore been most frequently to expend years of study, experiment, and research, his means, possibly his health: for what return? To find himself unrecognised, unheeded, and each year a poorer man than he was the year before: to find that for want of power, through the lack of means for its employment, he has served to lay a foundation for the after use of countries more liberal and more discerning, and so to possess another with ease of the gift to place which at the disposal of his country he has sacrificed the best years of his life. His only recompense, too frequently, is the internal consciousness that he is benefiting his fellow-man and adding to human knowledge; that when he is no more, his labours will still stand forward and receive acknowledgment, although too late to benefit him or those nearest to him—that he and others are acquiring knowledge which, if not bestowed in their country's service and for her aggrandizement, would ultimately diminish, if not deprive her of the power of

rewarding the toil of the most humble of her sons of labour. Of this consciousness none can deprive him.

But if the unpromising nature of the ground before him be insufficient to daunt the ardour of the lover of science when once engaged in its pursuit; if, knowing well the obstacles which present themselves in the rugged ascent, any gentleman of talent be content to pass by the beaten tracks to wealth and preferment to choose that which, successfully pursued, should lead him to renown,—if thus a man of undoubted worth and fidelity be secured to the cause of science, these obstacles are more than sufficient to turn aside, into the smoother paths leading to professions which hold out inducements to their pursuit, the far greater number of those who are well qualified by talent, education, and bias, to add to the stores of science and shed lustre on their country.

That every man in the pursuit of the investigations which his own peculiar genius suggests to him should be prepared for a time to sacrifice both means and social enjoyment, is just; but it is not just that their termination should hold out no promise of reward. From their nature they involve expense, the purchase of instruments, apparatus, and appliances of various kinds,—an expenditure of capital as well as thought and talent; but when he finds that they have precluded him from the acquisition, not of wealth, but of competence, and that just when years of study and perseverance have brought him to that position when to the furtherance of his investigations is necessary the co-operation of others, as in some measure directed by himself,—a direction for which

his previous career has well qualified him, he finds himself divested of the power of continuing longer the investments necessary to his pursuit; the loss to himself is great, but to his country it is greater. A man of the utmost energy and ability unassisted can do but little in comparison with that which, when directing others to the same end, he can effect. In the one case he resembles the vast engine which sets in motion a thousand wheels, which, acting in concert, produce results similar in kind, but of a thousand times the amount which the same engine applied to the one wheel could effect; and who that has witnessed the undeviating certainty and power of the former arrangement could doubt for one moment the propriety of granting means for the support of the motive power, the conferrer of such important elements of prosperity?

The scientific man being so frequently exposed to a life of unremunerated labour, urges me to express a hope that, at no distant time, the pursuit of science in England may constitute a distinct profession, open to the preferments and advantages of other professions;—when the young man, ardent in his pursuit of natural laws and abstract science, shall work on patiently and contentedly, successively attaining those steps in his career marked by public epochs of encouragement, until, arriving at the goal prescribed for reward, he shall find himself in that position where the energies and talents possessed by him, matured by the rigorous discipline of his previous career, may be expanded and freely exercised for the benefit of his country, which from the adoption of this policy would

secure a guiding power over inquiries highly serviceable to the public.

I have permitted myself to speak thus freely, from a conviction that the dawn of a brighter day for science is fast approaching. The erection of the Exhibition, and the respect shown to mind, by intrusting to its charge the management and direction of its multitudinous details, and the constituting it sole judge of the respective excellencies of its contents; the high interest that science in its highest applications and developements of power commanded from its Illustrious designer, leads to the reasonable expectation that more encouragement will be held out to those who are capable of adding to the number of truths on which such applications are founded, and glad I am to find that in this view I am supported by a brother Juror. In a letter I have lately received from Sir David Brewster, he says, speaking upon this subject, "I am persuaded that the Exhibition will exercise the most salutary influence, in so far as it will turn the attention of the influential classes of society to the vast national importance of encouraging science and the arts, by placing men who advance them in a better position than they have hitherto occupied in this country: and science, in place of moving upwards, struggling against a precipitous ascent in passing from the lower and middle classes to the higher, will ascend with a gentle movement, and carry with it the dignity and importance belonging to it."

The culture of science is itself a high test of civilization, and we are irresistibly led to think highly of a state of society, remarkable, like the present, for its persevering attempts to cultivate science, with direct relation

to the every-day necessities of life, its stores being daily ransacked to contribute to the meanest comforts of life, and to forward to perfection instruments, to assist in laying up theories for future use. As theories precede their practical application some little time, and require a high order of mind to deduce them from the observations of the many, it follows that the succeeding era of practical application must give occupation to many more; and the value of these practical applications the Exhibition was well calculated to expose, and did not fail to attest that the developement of scientific principles has not equally progressed in each country, although the developement in every case has preceded a very little while their general dissemination; but the exhibiting the superstructures erected upon such principles was well calculated to raise the most indifferent to the level of the best: in the same manner as the now established pre-eminence of the British microscope will cause the best exertions of the French and German makers to be directed, first, to equal, and then to excel them; while, at the same time, a knowledge that this is likely to be the case will act as an incentive to our microscopists for the maintenance of the superiority, which competent and close investigation yielded to them. This is a single illustration, out of many I could adduce, to show how the groundwork had been laid for the diffusion of a spirit of emulation, which, exercised between nations vying with each other in productive skill, will not be one of the least important fruits of the Exhibition.

Of the working details and management of the Exhibition I may not here speak, as they do not fall within my

prescribed limits; but I may with propriety observe, that the careful examinations induced by the medal awards elicited the greater number of those facts in connexion with the subjects collected, which must necessarily stand as the only record to posterity of the merits and utility of the collection. The eliciting and collecting of facts is at all times important, but the combination and classification is still more so, as giving tenfold value to those already gained, and withdrawing many more from the obscurity in which otherwise they must for ever have been plunged. Without the Jury examination, a knowledge of the novelties and improvements I have this evening brought forward would have been confined to the few. To award the medals, the criticism and judgment of gentlemen at home and from abroad were requested and obtained: by which means, not only were hidden merits revealed and their value estimated, but an official sanction was obtained, which, while it secured to merit its true position, gave to the public certain standards of excellence highly important for them to possess; and the contents of the building, and particularly of Class X., without the award system, would have stood merely as records of the industry and ingenuity of man, whilst the statistics of relative merit and the advance of nations would have been facts concealed by the caprice of individual opinion, not bound together by the pursuit of a sanctioned and enjoined inquiry. I speak with commendation of the system as a whole, and of the general results obtained, which, of sterling value now, will become still more so as the era of the Exhibition recedes, and the works of the present day co-mingle with the pro-

ductions for which the medals were awarded. But I should be doing fresh injustice to Mr. Simms were I to suffer the observations I have made to imply, that the second-rate medal awarded to that gentleman was to be understood as his due reward. Scarcely any one in this room can be ignorant, that the recommendations of the Jury for the Council medal could not be carried into effect without the sanction of the Council of Chairmen,—a body composed of gentlemen, each of whom was chairman to a separate class: thus, in the Council to which Mr. Simms's award was submitted, one individual only represented that class which was alone competent to decide upon the merits of instruments of so costly and exclusive a nature. By the constitution of this Council, those who were quite incompetent to form an opinion upon the merits of an astronomical instrument possessed equal voice with those who were well qualified to judge, and who must have necessarily been in the minority, as the improvements exhibited by Mr. Simms were only to be discovered and understood by those conversant with the use of astronomical instruments. To this Council, with whom it seems that the unanimous decisions of the Jury, and the groups of Juries, had no weight, the Chairman of Class X. had to maintain the recommendation of the Jury in every case in which a Council medal had been voted. This arrangement necessarily rendered the Chairman, in some cases, dependent upon those entrusted with special examinations, as in the present instance; a constitution so faulty, that the absence of an individual at a meeting might be followed by the loss of the information necessary to the maintaining the decision of the Jury.

Thus, a system good in its general working, as securing to a certain standard of excellence the same rate of reward, was, in this instance, incompetent to the necessities of the case. The Jury recommendation was not passed, and the medal awarded was that which, in the opinion of the Jury, was beneath his merit.

It should be borne in mind, that Mr. Simms did not voluntarily enter the lists as a competitor in that field from which it appeared evident he must return successful, for when the doors of the Exhibition first unclosed, there existed no contribution from him. The inadequate representation of British work soon became glaringly apparent, and Mr. Simms was urged and requested, late as it was, to retrieve our credit by exhibiting; he did so, and enabled our country to compete successfully with others. The return made to him might have been attended with great injury; but as one of those in whose hands has long been vested the credit of our country for its philosophical instruments, no fear can be entertained that he will sustain a diminished reputation. The improvements and excellencies of the instruments exhibited by him, and partly explained to you this evening, are alone sufficient to defend him in the opinion of those who have long appreciated his successful public career, and foreign nations who have long accustomed to avail themselves of the resources of his skill.

Let us, in conclusion, review for a moment that which we have discovered in this one department of the Exhibition. We have beheld the sciences of the age in their various ramifications and objects up to the moment of unclosing the doors of the Great Palace; we have beheld

the various methods, from our own and other countries, for the attainment of the same object; we have seen those methods analyzed, their merits and demerits estimated; also, the promised adoption of new and proved methods, the natural consequence of the publicity afforded to them. We have beheld the union of practical and scientific men, and its good results fore-shadowed; we have seen the artizan and the poorest labourer culling knowledge to the utmost of their power from the same source with men of cultivated minds and high position,—all which, I cannot but hope, will cause the Exhibition to occupy in time to come a high position among the scientific bodies of the age. The gratitude of all interested in the Exhibition (which must include that of every one anxious for the extension of knowledge), next to its illustrious designer, is due especially to those promoters of the undertaking,—the Executive Committee, who invested talent, time, and income, in its management and success, and to whom is due much of the good arising from its excellent management; for the Exhibition, when erected and furnished with its varied contents, stood but a vast engine, to be wielded either to the public advantage or disadvantage. At present it has contributed to extend the range of human knowledge, and will, in all probability, give rise to the institution of industrial schools, which, when once established, will hardly be relinquished. These industrial schools will cultivate the many, and their establishment, sanctioned by time and increased in number, will cause the influence of the Exhibition of 1851 to be far spread and felt in all time to come.

Feb. 4, 1852.

LECTURE X.

ON CIVIL ENGINEERING AND MACHINERY GENERALLY.

BY

HENRY HENSMAN, Esq.

HENRY HENSMAN, Esq.

ON

CIVIL ENGINEERING AND MACHINERY GENERALLY.

The machinery in the Great Exhibition, which formed one of the four great divisions, was remarkable not only from the great space occupied by it, but in most cases for the very excellent specimens sent, and to the general public of extreme interest, from the fact that, with the exception of locomotives and steam-boat engines, few people ever see machinery in motion, and no engineers even had ever seen all the varieties there exhibited.

Some difficulty was found in drawing the line that should divide Machinery from Manufactures, and many apparent errors of arrangement arose from the fact, that in some cases the exhibitors wished to have the whole of their articles in one place, and until the very tardy arrival of the things themselves their exact classification was impossible, and it was then often too late to make any change. Thus one justly-celebrated firm, having a grant of space for iron work, sent as part of it cannon and a sugar-mill, several tons weight, and found themselves in the same class as

candlesticks and teapots. Many pumps were very properly sent as manufactures, and many others as machines. Most of the mining apparatus was shown in the section of Raw Materials, in connexion with the minerals worked by it; but in some cases, where of general application, as in the pumping and lifting apparatus for mines, especially where put in motion, it was placed in Machinery proper.

Filters were much scattered, some being sent in as hydraulic machines, others as specimens of mineral manufactures, and others again in exhibition of earthenware goods. In one case, where space was applied for to exhibit a filtering-machine, it turned out to be an ordinary coffee-pot. Weighing machines were found in three places, viz. as machines, as philosophical instruments, and as ironmongery.

Locks in all cases were exhibited as ironmongery, but several of them showed very much greater mechanical talent than was displayed in machines of great pretension. Other apparent discrepancies in the arrangements arose from the necessity of bringing all those things near together that required supplies of water and means of running it to waste.

The very late hour at which any of the foreign exhibitors claimed any space for machinery in movement precluded any good classification of position for them amongst similar English machines; and the American wood and stone-planing machines, and pumps, were thus of necessity placed in the only space available, and which had been allotted for cotton machinery, withdrawn shortly before the opening.

The French machines in motion, for making chocolate and for wood-planing, were also far distant from all other similar machines for the same reason. At one time, for machinery alone an excess of 5000 square feet was allotted to individuals more than was available, on the ground that many withdrawals were certain to occur; and when they did take place, it was not possible to fill up the space thus falling vacant with a similar machine. On these grounds, then, some allowance must be made for the arrangements being to some extent imperfect, both on the ground and in the Catalogue.

CLASS V.

Machines for Direct Use.

In the class of land steam-engines, the Exhibition did not fairly represent the state of things in the world generally, and many reasons combined to produce this result. They are usually bulky and heavy, and require strong foundations and large quantities of steam and water if at work; and if not, their performance cannot be judged of. Six-horse power was the limit put upon the size of engines that were to be put in motion; and as engines of this size are made by almost every engineer, the leading makers, whose fame enables them to obtain orders for the more costly large engines, seldom trouble themselves about either making or improving small ones, and did not send any of their large ones.

Marine engines, for the same reasons as to bulk and weight, were not numerous, but were of a very superior description. The size and weight did not deter the spirited

firm of James Watt and Co. from sending a pair of screw-propeller engines of 700-horse power, and weighing, without boilers, more than 100 tons.

Marine beam-engines of the plan usually made till a few years ago, and still in vogue in some places, were not shown except in model; and little attention is now given to them since the direct-acting engines were introduced, as these latter offer many advantages in saving weight and room, besides having fewer parts liable to fracture. None of the builders of large engines on the Clyde sent at all, though one of them devoted much time to the Jury.

Marine oscillating engines for paddle-wheel boats, and of admirable arrangement, were shown in model by two of the first English makers, Maudslay and Penn, the latter of whom sent also a pair of 12-horse engines as used in the boats on the river; and a pair of full-sized 70-horse boat-engines were sent from Belgium by Cockerell, of Liege.

This class of engine has been little altered in arrangement since its introduction in boats, except in the position of the air-pumps, and in being better balanced by having two small slide-valves near the sides, instead of one at the front. This modification will no doubt be now generally followed, as its advantages are evident in keeping the engines better balanced, and the gear lighter and more compact.

Marine boilers, which are of such importance in steam-navigation, were, from their bulk, almost totally unrepresented, although few things of the present day show more rapid progress and greater varieties of arrangement and proportion. The modern tubular boiler has nearly super-

seded the old class of flue boilers in steam-vessels, and, like the direct-acting engines, saves much room, as well as great weights of water and iron.

Marine engines for driving the screw-propeller were objects of much interest at the Exhibition; and rapid progress is making in this sort of engine, which offers in many cases great advantages for steam-vessels, even over the most improved form of direct-acting paddle-wheel engines; for, fortunately for the progress of science in this department, the long and firmly-established rules respecting the speed at which the pistons of condensing steam-engines should move, were of necessity abandoned when the engines were connected direct on to the screw-shaft, and experience has proved that increased speeds in marine condensing engines may be obtained without any inconvenience, especially when canvass or india-rubber valves are substituted in the air-pumps for the old metal valves, which were quite unsuited for high speeds.

In some cases, makers are still using geared wheels to gain the necessary speed of the propeller shaft, but this plan will probably be completely superseded by engines coupled direct on to it; as, with the example before us of the very excellent results obtained in locomotives, where the pistons often run four or five times the speed formerly considered right, it cannot be doubted that the same thing may be done in steam-boats: for instance, a locomotive engine of the largest class will exert a force equal to that of 1000 horses, although it will weigh only 35 tons; and this includes water in the boiler, giving the power of about 30 horses for each ton weight.

Let us now look at the weights of marine engines. First of all, the old beam-engines and flued boilers, with 3 or 4lbs. steam, gave only a force equal to about that of two horses for each ton weight. The direct-acting engines and tubular boilers, and increased pressure and speed of piston, may be said to have brought each ton weight to equal the power of four horses, and, in one or two cases, even up to that of six horses. It must be borne in mind, that, owing to low pressure being used in marine engines, they are burdened with condensing apparatus, and are necessarily very bulky. Salt water, too, in many cases, and in all the necessity of guarding against fire on ship-board, prevents diminution in the boilers to the extent of those of locomotives; but, allowing for all these circumstances, it hardly justifies so great a difference in the power obtained from a certain weight in machinery as we find to exist between locomotive and marine engines.

The Exhibition shows us, that in the better sorts of engines sent there the simplification of parts is very much studied, and especially in the screw-propeller engines, which, for condensing engines, are of great simplicity compared with previous productions even of the same makers. The models on the table are of some of the most approved modern forms, by Maudslay and Penn.

Of screw-propellers themselves, one great novelty was the feathering-screw, shown by Messrs. Maudslay and Field, which allows the blades to be easily moved, either into the proper position for propelling the vessel, or, when not steaming, they may be brought in a line with the stern-post, so as to offer little or no resistance to the progress of

the vessel if sailing. They have been tried and found to answer well in the screw steamers running to the Cape of Good Hope and back, which is, perhaps, the longest voyage undertaken regularly under steam for passenger and goods traffic.

Amongst the steam-engines was one sent by Mr. Davies, of Tipton, to which was attached a most beautifully-arranged governor. It consisted of a single hollow ball with a zone round it, with an opening through the bottom to admit of an upright spindle, which was attached to the ball by a joint in its centre. One side of the ball and zone was made much heavier than the other, and consequently, when at rest or moving slowly, it hung down, but when driven fast the centrifugal force of the heavy side overcame its gravity, and the zone assumed nearly an horizontal position. When this was the case, a small link inside the ball, jointed on one side of the axis, lowered the usual brass collar on the spindle, and shut off part of the steam, till the speed diminishing allowed the gravity of the zone to overcome the centrifugal force, and the link being raised, the throttle-valve was opened wider to admit more steam.

A very good steam-pump was shown by Mr. Garrett, and was worthy of remark from having an air-vessel on the suction-pipe as well as on the delivery, making the stream almost constant, and doing away with the shocks often felt in pumps that are driven at great speeds from the recoil of the column of water in the suction-pipe. These pumps were used to feed the boilers in the Exhibition, and ran a very good speed, with very little shock to the moving parts.

Very good illustrations of water-engines acting by pressure from a head of water, and not by mere weight, were shown by Mr. Armstrong, of Newcastle, and are an easy means of obtaining small amounts of power at very little cost, especially in towns where the water is furnished on the constant-supply system, inasmuch as the water is available for domestic or other use after giving out the power derived from its pressure. Many such machines are now erecting in London; some at the Great Northern Station, King's Cross, for lifting goods; and others at the West India Docks, for discharging coal-ships.

Another water-engine of great promise was shown by M. Fromont, in the French compartment. It was a turbine on Fontaine's system of construction, having numerous apertures, easily adjusted simultaneously by small sluices, and well adapted even for low heads of water; it was reputed to do a duty of 70 per cent of the water used, and was estimated by the Jury to deserve the Council medal for its good qualities.

Hydraulic presses were in great force, and foremost may be named the large press which had served for lifting the tubes of the gigantic bridge over the Menai Straits.

Mr. Hicks's compound press, which is furnished with four cylinders, is a valuable modification of the principle where great powers are required; for it is found that, beyond a certain thickness, the extra metal added does not give corresponding strength. The specimens of wrought-iron punched out cold give a good idea of the force exerted by this press, one of them being eight inches

diameter and three inches thick; and this took a force equal to the weight of more than 2000 tons.

Mr. Jackson's hydraulic press was another variety, which was arranged specially to meet the difficulty found in obtaining sufficient strength for large cylinders. It is made of cast-iron, much thinner than usual, and then bored and turned true inside and out; it is then hooped with wrought-iron hoops, accurately fitted. The bottom rests on a block or table, and the cupped leather, instead of being fitted as usual in the upper part of the cylinder, is fixed to the bottom of the ram itself, and travels with it: by this arrangement, the strain on the cylinder in the direction of its length is entirely avoided; and in cases where any very enormous amount of pressure is wanted to act only through a short distance, the ram may be brought down to the bottom of the cylinder, and the water being forced in between it and the bottom, a mere film of water is enough, and only so much of the length of the cylinder has any strain on it as is equal to the distance required to be travelled.

In cranes, the greatest novelty was the wrought-iron tubular crane sent by Mr. Fairbairn, which is likely to be extensively used, and offers great advantages in point of lightness and strength combined.

Henderson's Derrick crane was also a very excellent one, and a most ingenious yet simple means was used for raising or lowering the gib without altering the height of the load on it.

Another crane deserving of notice was that shown by

James and Co., which lifts and weighs at one operation; and a somewhat similar crane was shown in the Dutch compartment.

The application of steam to lifting purposes was very well shown in the model travelling-crane sent by Messrs. M'Nicol and Vernon of Liverpool. By means of this invention, a boy may lift a weight of ten tons or more, and traverse it either endways or sideways with the greatest facility; and for large buildings, or for wharfs and docks, stone-yards or timber-yards, it promises to be a very valuable aid in performing large quantities of work.

The subject of water-pumps was one that attracted as much, if not more attention, than anything else among the machinery; and this was more especially the case with the centrifugal pumps, which were little known, and scarcely ever used before the time of opening this Exhibition: and in these again, as before in the case of the locomotive and screw-propeller, the very valuable lesson was shown, what very great effects may be produced by a very small noiseless machine, running at a high speed, in place of the old-fashioned cumbrous pumps, making a few strokes per minute, and shaking the very earth near them at each stroke.

As a case in point, may be instanced the ponderous machines constructed only a few years since in this country for the purpose of draining the well-known lake of Haarlem. The weight of the pumps and valves attached to one of these engines will be between 100 and 200 tons,

and they were adapted to raise 70 tons of water per minute a height of about 15 feet, when working their usual speed of eight or ten strokes per minute.

A centrifugal pump, to do the same amount of work, if on the best plan, such as that shown by Mr. Appold in the Exhibition, or that since made by him for the drainage of Whittlesea Mere, would weigh only about two tons, instead of from 100 to 200 tons on the former plan.

It is an arrangement also to which small fast-running engines are particularly applicable, though it must not be supposed, that when equal quantities of water are lifted equal heights there is any great difference in the total power exerted.

It must be borne in mind that these centrifugal pumps, like all other machines, require peculiar adaptation according to the purposes for which they are required, and their most advantageous point of working is where the lift does not exceed 15 or 20 feet, as when the water requires lifting any very great height other pumps will perform better.

Another thing frequently misunderstood or overlooked is the shape of the arms, and this exercises a most important influence on their good or bad performance. In those pumps where the arms are radial, the work done is the least, and may be taken at about 25 per cent of the power employed. Where the arms are placed at an angle of about 45° with the radius, the work done is about equal to 40 per cent of the power; and where the arms are of the proper curvature, as much as 70 per cent of the

power may be realized. The flat discs are rather better than those that converge at the edge, but neither this nor the number of arms affects the quantity of work done to anything like the same extent as the proper shape of the arms. One single arm is bad, as it puts the pump out of balance, besides losing effect. Another thing to be remarked is, that, provided the speed of the external circumference of the discs be equal, it is not of so much consequence whether a two-feet disc be used to run 400 revolutions, or a one-foot disc be applied to run 800 revolutions, but in all cases it is necessary to proportion the velocity of the circumference according to the height to which the water is to be raised.

A centrifugal blowing-machine, or fan of a very good sort, with curved arms, was shown by Mr. Lloyd, and has the great advantage of being quite noiseless; whereas the common fan with straight arms is very noisy. There is, however, much yet to be learnt on the subject of blowing fans, and they absorb much more power than they ought to do.

Fire-engines were sent from Canada and France, besides our own country, and numerous experiments were tried by the Jury in this department. The results obtained were much more equal from all than might have been expected, considering the very great difference of make, from the large Canadian engine requiring 40 men to the small French engine for eight men.

In locomotive engines the Exhibition did not at all fairly represent the usual class of locomotives, for most of

the engines sent were of an exceptional and not of the ordinary description, such as are employed in doing the bulk of the work either in this or other countries.

The noble locomotive sent by the Great Western Company, represented truly the best sample of the broad-guage class of engines; but the more numerous narrow-guage engines made by Sharpe Brothers, and others, and the usual sort made by Stephenson, were not represented in the English side, where most of the locomotives were of the sort called tank engines, having no tenders, and seldom used except for very short or for branch lines.

Hawthorn's engine is deserving of notice, as having been some years ago one of the first successful attempts to obtain dry steam from a low boiler by means of a long steam-pipe running along inside the boiler near the top, and perforated with small holes, or slits, which draw the steam off without taking the water as well. The arrangement of the springs also is peculiar, for though a six-wheeled engine, yet the great weight is carried on bars reaching from one axle to the other, and thus any wheel passing over an irregularity on the rails only lifts each supporting spring half the amount due to this irregularity. This is also done in the Great Western engine, and some others.

Crampton's engine differs from all others in having the axle of the driving-wheels placed behind the fire-box, which allows of a very low centre of gravity: and when six wheels are used, the centre pair either has very light springs to serve as safety-wheels, in case either of the

other axles break, or else the boiler is supported by one spring between the two axles. This has the effect of throwing the greater part of the weight upon the two end axles, and the centre of a cross-spring behind the fire-box carries the weight of this end of the boiler, so that it is very steady from resting on three points. In his most modern arrangement with inside cylinders, the cranked axle has no wheels upon it, and being on the springs is thus relieved of all strains from inequalities of the road; it is coupled to the driving-wheels by two rods, with outside cranks, and combines the straight axle of the driving-wheels with inside cylinders. The Council medal was awarded for this locomotive.

In railway-carriages the use of teak-wood, not requiring paint, but merely varnished, was shown in the Exhibition in the Great Northern Railway passenger-carriages by Mr. Williams, and also in Mr. Adams's long double-bodied carriage; and it is likely to be used for many other purposes. The arrangement of the body of this latter carriage of Mr. Adams is almost the only departure from the form of body introduced at the opening of the Liverpool and Manchester Railway, now about twenty years since. The axles are allowed a considerable amount of play in the guards to allow of passing curves more freely with these long carriages. Another very ingenious arrangement for overcoming this difficulty with long carriages was shown by Mr. M'Connel, where the axles are coupled to one another by diagonal braces, so that they actually become radii of the curve over which they are passing.

Railway wheels and axles were very good and numerous, but no very great novelties were shown. However, we must not omit Brigg's compound tires, with hard iron in the wearing part, and tough in the other parts; and also the beautiful specimens of rolled tires sent by Mr. Jackson.

The cast-iron wheels in common use in America were the only sort sent by them, and it is much to be regretted that no railway engines or models of carriages were sent from that country, as from the great differences that exist between them and those in use here, they would, when contrasted, very probably have shown advantages capable of mutual adaptation.

There was a model in the French compartment of a train of articulated carriages as used in the railway between Paris and Sceaux, where the wheels revolve on their axles: this has been done on account of the sharpness of the curves, and has worked satisfactorily for some years, but nevertheless does not seem to have been adopted on any other lines, though it has been repeatedly proposed from the very infancy of railways.

One great novelty in the railway carriages was the adoption, by Mr. Haddan, of papier-mâché panels instead of wood; and the mode of framing also was both simpler than that usually adopted, and better adapted to prevent wet getting into the joints.

Amongst buffers there was nothing particularly worthy of observation, except the now well-known vulcanized india-rubber buffers of Mr. De Bergue.

Railway breaks offered no great novelty, though perhaps not much known among the public generally. Lees' sledge-break, or those similar in plan, shown by others, were brought much into notice, which they would not have received but for this Exhibition.

There was in the Exhibition a great variety of plans for permanent way for railways. The rails shown by Mr. W. H. Barlow are truly a wrought-iron way, inasmuch as they require no sleepers, but rest on the ballast itself. They are bridge-rails of the very largest size and section, and although some difficulty was met with in first rolling them, that appears to have been soon overcome; and the Exhibition afforded in this particular abundant evidence, not hitherto known, of the present capability of producing rolled iron of very great size, great variety of form, and excellent workmanship. The joints of these rails were made by a short length, about two feet long, of a section suitable for fitting below the rail, and riveted to it, and little or no inconvenience seems to arise from the expansion or contraction.

Another striking departure from the beaten path was shown by the sleepers exhibited by Mr. Greaves; they are not unlike a huge inverted wash-hand basin, with the chair cast on the top, and are packed through a hole left near one side of the top.

Several contrivances were shown for strengthening the joints in the rails, including Samuel's fish-joint, Mr. Peter Barlow's joint-chain, and others. The permanent way adopted by Sir W. Cubitt, for the South-Eastern

Railway, and the Great Northern, was well exemplified. In this and most modern plans, the sleepers are laid much closer near the joints than at the other parts.

Wild's well-known switch was exhibited attached to this road, and except in the improved details is but little changed for some years past.

Ransomes and May's chairs, and the compressed wood-wedges and trenails used for fastening them down, are a great improvement over iron fastenings, and the latter are equally valuable for ships' trenails from their great hardness and durability.

The rails shown in the Exhibition, composed of hard crystalline iron for the top wearing surface, with tough fibrous iron for the body, are a great step towards durability, without necessarily adding much to the expense of manufacture.

A most extensive collection of rolled iron and railway bars was shown by the Ebbw Vale Company and the Coalbrookdale Company, including almost every variety of shape.

A railway water-crane shown by Ransomes and May is very deserving of notice; it is formed with a rising hinge-joint, on the same principle that many doors are fitted, so that it may be held open or across the line, but when let go it turns part round out of the way of the trains.

Dunn's valuable traversing-table was shown by more than one exhibitor, and received a Council medal.

Pooley's weight-table for railway engines, and the weighing machines generally, are well known, and need not be further mentioned here.

With regard to common road carriages, which were classed among machines, the principles involved admit of so little variety, and so much depends upon taste in their manufacture, that I need say but little, except that it appeared to be thought, even by many of the exhibitors themselves, that, taken as a whole, it did not come up to the expectations previously formed of it.

CLASS VI.

Manufacturing Machines.

In this class, the most extensive in the whole Exhibition, the cotton machines were most remarkable, both for their extent and the very complete series they formed.

Here were to be found, especially in the admirable collection of machines by Messrs. Hibbert and Platt, of Oldham, machines adapted to display almost every process, from the opening of the cotton bales on their arrival in this country up to the time of leaving the loom complete in the state of calico ready for bleaching; and the Royal Commissioners and public are largely indebted to this firm for the liberal and spirited way in which they illustrated that important manufacture, and Lancashire may well be proud of the way in which her machines were represented. The opportunity here afforded to the general spectator of studying the immense number of complex operations required, was one that the world had never previously known, and the crowded state of the building in that part testified the interest it excited. It was also a valuable

lesson to professional engineers, few of whom were previously conversant with all the details of these machines; and, in very many cases, movements and combinations of parts not hitherto applied elsewhere, were found to be of the greatest utility in other machinery.

It is somewhat remarkable that scarcely any cotton or other machinery whatever was sent from Glasgow, or indeed from Scotland at all.

France and Belgium contributed some cotton machines, but none in actual operation, and therefore it is hardly safe or fair to institute a comparison of their powers of production; but, nevertheless, the "Depurator," or cotton-cleaner, of M. Risler, was thought deserving of a Council medal.

A highly ingenious cotton drawing-frame was sent from the United States by Mr. Hayden, and I believe for the first time in this country we saw the machine, called a saw-gin, for cleaning the seed cotton as it comes from the field, and separating it into the two parts — one, the filaments of the cotton itself, as used in manufactures; the remainder, the comparatively valueless seed, which forms by far the largest part of the whole quantity grown.

Many attempts have been made of late years to find a substitute for this machine, but hitherto without much success. The fault complained of is, that the saw-teeth are apt to cut the fibres whilst tearing them away from the seed, and thus reduce them in length and consequently in value.

At the present time this want is so much felt that a reward of 5000 rupees has been offered by the authorities

in India for the best machine adapted for cleaning the native cotton, which differs somewhat from the better class of American cotton in being shorter in the staple, and also adhering much more tenaciously to the seed.

Some disappointment was felt that no such machines were forthcoming in the Exhibition here, as only one, sent by Mr. Calvert from Manchester, was any departure from the saw-gin plan; but it is to be hoped that the next accounts from India may give information of other and successful attempts, as the machines were all to be in Calcutta by the 1st of January of this year. While on this subject, so important to our possessions in India, I may allude to the very complete collection of native machines for this and other purposes.

The churka, or roller-gin, is the type of all the various machines they use for cleaning the cotton, some with plain rollers, and others with spiral grooves worked along them, and they answer the purpose of separating the cotton from its seed, but are very slow in their operation. The other Indian and Asiatic machines and tools were of a most interesting description, and in many of them can be traced the very greatest ingenuity, though they are rude in workmanship. Amongst others I may name an instrument often found in this country lately, and considered a modern invention; I allude to the spiral drill-stock, so well known to amateur mechanics, and which we find to be an old Chinese invention.

A machine for printing calico on both sides was shown by Mr. Dalton, and the accuracy with which the pattern on the two sides coincided was most wonderful; it was

much to be regretted it was not worked, as it was almost the only cotton process except bleaching that was not shown.

Woollen Machinery was principally represented by one house, that of Mason of Rochdale, and a very complete and excellent set of machines were sent, some of them new to the trade, and especially to foreigners. Their condenser card in particular merits notice, from the rapidity and simplicity of its operation, and the award of a Council medal shows the estimate of the Jury of its importance.

It is somewhat remarkable, that Leeds and the West Riding of Yorkshire should have sent plenty of woollen and worsted goods, but no machines whatever, with two exceptions; one of them a very good set of worsted machines by Mr. Berry of Bradford, and the other the wool-combing machine of Mr. Donisthorpe. This latter machine is one of the most effective ever produced, for, unlike the cotton-gin, which modern invention has not perfected to separate filaments from hard seed, we here find an automatic machine performing the much more difficult operation of separating the long wool from the short; and the success of it may be judged of, when I state that uncombed wool put in at one side comes out at the other side, the long completely sorted from the short, and much increased in value.

Among the French machinery were some machines for carding and spinning wool, by Mercier and Co., to whom the Council medal was awarded; one part was particularly deserving of notice, viz. the arrangement of index wheels on the mule, for regulating at one operation the distance

to which the thread shall be drawn out according to the fineness required, and also the amount of twist given to the thread.

A very simple machine for cleaning wool from burrs was shown by Mr. Calvert, and for this and the cotton-gin previously named he was awarded a Prize medal.

Strange to say, there were no cloth-shearing machines shown on the English side, but several on the Foreign side. Among the French machines, one by Schneider and Legrand; in Belgium, one by Troupin; and in Prussia, one by Thomas: all three of which were adjudged worthy of Prize medals.

. The process of making card wire-cloth was shown by a most beautiful little machine sent by Mr. Crabtree, which, though not new in this country (the plan having been introduced some years since from America), yet to the public it was more attractive than almost any other in the Exhibition, and showed in a most valuable manner how mechanical skill may produce machinery capable of performing the most delicate and difficult operations with unfailing regularity.

Several specimens of card clothing were shown by other makers in England, and there were few countries of any manufacturing pretensions that did not also contribute equally good specimens of this article, so necessary to the cotton and woollen trade.

Prize medals were allotted, as might be expected, to exhibitors from the United States, and also to two others from France, and the same state of things may be said to hold good with regard to heckles and combs, many of

which were quite equal to anything produced in this country.

Flax machines were sent by Plummer of Newcastle, Messrs. Higgins of Manchester, and Lawson and Sons of Leeds. Mr. Plummer's breaking rollers, scutching mills, and heckling machines, showed all the preparatory processes in the manufacture of hemp and flax after being taken from the steeping pits; and Messrs Lawson's machines showed almost all the subsequent processes up to the complete formation of the flax into linen yarn, ready for the weaver, or for sewing purposes. The operation of drawing out and spinning flax usually requires the application of hot water to loosen the gum which holds the twisted fibres together, and this renders the air of the mills hot and unwholesome; but Lawson's process, shown in the Exhibition, dispenses with this hot process, and by keeping the fibres less twisted at the time of drawing them out finer, cold water is found to be sufficient to dissolve enough of the gum to allow the individual fibres to slide one on the other, as much as is necessary: this has an important salutary influence on the health of the operatives employed.

Mr. Crawhall's rope-machine was one possessing many good arrangements, and the arrangement for putting more or less twist in the rope is very ingenious.

A very novel addition to a canvass loom was shown by Mr. Beale Brown, for use where the woven fabric requires beating up very hard; it is a triangular stick, which is thrown in and out by a motion similar to that used for the shuttle; by means of the sharp edge of this stick the weft

is beaten up at intervals, and will allow of very great force being used without damage to the work.

Messrs. Parker showed a very strong and elaborate canvass loom, for which the Council medal was awarded to them. The taking-up and giving-off motions were arranged so as to move the necessary distances, whatever the quantities of warp or work on the respective rollers. Some very good heavy looms for plain work were shown by Mr. Mark Smith of Heywood, and others of a lighter sort by Mr. Harrison.

Another loom adapted for ornamental work, and with a double Jacquard apparatus attached, one on each side, giving greatly increased facilities for speed of production, was shown by Mr. Alfred Barlow, which also gained the Council medal. Another Jacquard loom, adapted for the most elaborate patterns of brocaded silks, was sent by Messrs. Campbell, Harrison, and Lloyd, and some idea may be formed of its complex nature from the fact that no less than ninety shuttles are said to have been used in it.

The fringe-loom of Messrs. Reed of Derby, who obtained a Council medal, was the greatest departure from the ordinary course shown, and perhaps it can scarcely be called a loom, for it has no shuttle, and is almost noiseless in performing its beautiful movements,—in fact, it is a machine which may be almost said to be adapted for a drawing-room. There are twenty or thirty breadths of fringe made at once, and as many different colours, either of weft or warp, may be introduced in one loom. The warp-threads are arranged much as usual in breadths, and each weft-thread is passed through the eye of a needle at

one side of each breadth, and at the proper time is laid across the warp-threads, and tight around the blade of a knife, which is rather narrow and not very sharp at this part: the reed then closes up and holds the thread firm while the knife is drawn down, and the point being much wider than the other part, and quite sharp, cuts the outside edge of the fringe, and then rises again ready for receiving another thread around it when the same process is repeated.

Many other new modifications of Jacquard apparatus for looms and lace-machines were shown in the Exhibition, and are at the present time attracting much attention, and Prize medals were given to Acklin in France, Bonardel in Prussia, and Gamba in Austria, or rather Lombardy.

Circular hosiery machines and looms, exhibited from France, their parent country, as well as in this country and Belgium, are good examples of the extent to which complexity of machinery may be profitably carried when its production is rendered more rapid; and this was well shown in the contrast between the simple stocking-frame and the more rapid production of the complex circular machine adjoining it. And still more is this shown in the almost endless variety of parts and movements in the various beautiful lace-machines sent from Nottingham, when contrasted with the former process in use only a few years since, when even plain lace net was made by the hand. The combination of the Jacquard apparatus to the previous complex machines has added much to their capability of making intricate patterns, and was well shown

by Mr. Birkin's machine, which was constantly worked. There is one point about the working of these machines that requires notice; which is, the constant breaking of threads that took place, especially early in the day: for these machines require a very dry, warm room, and the least dampness of the atmosphere causes the threads to break; the same is the case with the threads in the cotton-spinning mills.

Printing-presses and machines shown by English exhibitors were numerous and very good, but few, if any, were on the Foreign side. The hand-presses had amongst them two or three examples of self-inking apparatus, which is a step towards reducing the time necessary for each impression, and probably for small presses they will succeed; but objections are made, that in a press of any great size the labour is too heavy for the pressman.

In connexion with this subject of self-inking presses I may mention, that a few days since, in Dublin, I saw a very simple and effectual inking apparatus, worked by power and attached to a hand-press. When the table is drawn from under the press, and is just at its extreme distance from it, it throws a clutch into gear at the side of the press opposite the workman, and the inking rollers move sideways across the form, whilst the pressman is changing the paper; and on their return into their original position the clutch throws itself out, and the rollers remain at rest on the inking table, until the form is again moved out to its greatest distance from the press, when

the operation is repeated; this enables one man to do the work of two, but, of course, is only applicable where power is available.

In printing-machines, the first claiming our notice is the cylinder machine of Mr. Cowper, now in general use, and used for printing the Exhibition Catalogue. A model sent by that gentleman shows that the general form has remained little altered, since its first introduction many years since, and its use is almost universal.

In Napier's cylinder machine, which is somewhat on the same general principle, there are small grippers fixed on the cylinder, which seize the front edge of the paper and carry it round with them, dispensing with the tapes.

The Scandinavian printing-machine was sent by Mr. Hopkinson, and modern improvements on this and other platten machines are fast approaching the press in the quality of the work done.

The largest and most novel printing-machine shown in the Exhibition was the vertical machine invented by Mr. Applegath for newspaper printing, and which was fixed and worked in a most spirited manner by Mr. Ingram, the proprietor, the whole time printing the "Illustrated News."

Towards the close of the Exhibition a newspaper-folding machine was got to work by Mr. Lovesey, and the public had the satisfaction of seeing this final operation performed for the first time in the building. A smaller folding machine had been shown previously at work for book-work, by Mr. Black, of Edinburgh, to whom the credit of introducing the plan is due.

Paper machinery was shown in model by Fourdrinier's first machine, and a model of a modern machine by Donkin; but it was only in the French machinery that a full-sized machine was exhibited. Excellent samples of wire-cloth for this purpose were also shown by France as well as England.

Two plans of envelope-making machines were shown, one by Mr. De la Rue, and the other on Remond's plan, by Messrs. Waterlow, and both of them contained many admirable arrangements.

I must not omit to mention Wilson's paper-cutting machine, which is a new and valuable addition to our stock of tools.

Turning now to the various machines for working in mineral and vegetable substances, we find a highly ingenious machine for grinding colours, or other substances, in a mortar, by Mr. Mackenzie, in which the compound motions are so arranged as to change the course over which the pestle travels at each revolution of the machine.

Crosskill's small but effective mills for grinding are well worthy of notice, and he is likely to reap a rich harvest from those adapted for crushing stone and quartz, on account of the great demand for such machines in California and Australia. Several modifications of the valuable modern plan of supplying a current of air to the stone of corn-mills were shown. Several good plans of flour-dressing machines were sent.

Another interesting machine was shown by Randell and Saunders, of Bath, for cutting stone in its natural

bed, and promises great saving of labour in the process of quarrying.

Mr. Bessemer exhibited a valuable apparatus for holding large glass plates during the operation of polishing them; it consists of a slate table, perforated with holes, and a vacuum being formed below it, the glass plate is firmly held down while it is polished.

Centrifugal machines for separating water from clothes, or molasses from sugar, were shown by many parties, both from abroad and this country, but few of them call for any special remark, except that shown by Napier and Son, which differs from the others in having a continuous action going on for charging and discharging sugar or similar materials, instead of requiring to be frequently stopped for that purpose, and where high speeds are used, as in all these plans, the loss of power in getting the speed up again each time is considerable.

Sugar-crushing mills were shown by several countries, one of them very complete and powerful, by Robinson and Russell, but are all on much the same plan as they have been for years past. Sugar-refining apparatus obtained Council medals in Prussia, France, and England.

It is somewhat remarkable that no specimen of wood saw-mill was found in the Exhibition; there were, however, several wood-planing machines, both for plain and ornamental work, from America, France, and our own country: and a very ingenious and simple machine for cutting fret-work was shown by Messrs. Prosser and Hadley.

A very modest little wood model was shown by Mr. Gilbertson, of a means of destroying the effluvia from boiling or melting tallow, or similar offensive substances, by enclosing the top of the boiler with a hood, and causing the whole of the air necessary for the combustion of the fire to pass over the surface of the tallow; this draws the effluvia along with it into the fire, where it is effectually destroyed.

The soda-water apparatus shown by Mr. Cox was very ingenious, and is so arranged as to dispense entirely with the force-pumps required on the old plan.

A very good set of machines for the manufacture of chocolate was shown by Herman Brothers, of Paris, and they received a Council medal for them.

CLASS VIII.

Civil Engineering and Architecture.

In Civil Engineering generally, such as bridges, harbours, and such works, there was not so rich a collection as might have been expected; but one reason is, that they are seldom illustrated except by drawings, which were not admissible according to the decisions come to by the Royal Commissioners; but, nevertheless, this class may be said to have been more fully represented than any other, inasmuch as in it was included the great triumph of the Exhibition—the building itself. It will exercise a most important influence over future works, both as showing the cheapness and capabilities of iron and glass, and also the

very rapid progress that may be made where they are the materials used. There never was any instance in which cast-iron has been used with so much boldness and success, for of the many thousand pieces employed, not one ever failed in its allotted place.

Among the few contributions to this class are two models, of remarkable and successful boldness of design—Stephenson's tubular bridge over the Menai Straits, and Brunel's iron truss-bridge over the Wye at Chepstow.

The beauty of the workmanship in the first-named model, which was executed by Mr. James, is something quite unprecedented, for all the parts are made to scale in the most minute particulars. The suspension-bridge, by Mr. Vignoles, over the Dnieper, at Kieff, in Russia, is represented by another model by James, equal, if not superior, in workmanship to the other. Mr. Leather sent some very good models of his bridges made by Salter, and a good model of Stephenson's double high-level bridge at Newcastle was sent by Hawkes and Co.

Some railway drawbridges were contributed from Holland, and are excellent of their kind; as also a large model of a suspension truss-bridge from the United States, by Mr. Rider.

Two excellent topographical models of large districts of country were shown, one by Mr. Carrington, of the neighbourhood of Manchester, and another by Captain Ibbetson, of the Isle of Wight.

A most interesting model was sent by Mr. Bremner, showing the means adopted for raising the Great Britain steam-ship when stranded on the coast of Ireland; and

another valuable plan was shown by him for harbour-building in deep water and exposed localities.

Several breakwaters were shown in model; amongst others, that at Plymouth, and also Smith's ingenious floating breakwater.

Wilkins' floating-light and Chance's lighthouse apparatus were good specimens of the excellence attained in this branch of manufacture.

Two or three sets of diving-dresses were shown, but there was little novelty in them, and neither Potts' system of sinking piles, nor the still better plan now in use at Rochester Bridge, were shown at all.

A very good set of boring-tools were sent by Laué, of Switzerland, and Messrs. Mulot contributed a set of large and complete tools, such as they used in boring the celebrated Artesian well at Grenelle.

Ventilators of good and novel sorts were shown by Mr. Hurwood, and a new and simple revolving window-sash, which offers great facilities for cleaning, was shown by Mr. Bodley.

The collection of agricultural instruments, though not so extensive as at the annual agricultural meetings, was very choice, and would require a whole evening to do justice to it on some future occasion; but I cannot pass over the very marked improvement made of late in the portable steam-engines for farmers' use; and this state of things is one of all others that is specially due to repeated exhibitions, and, above all, to repeated trials of actual work by independent parties. The keenness evinced by

the makers to excel in the trials is even more marked than their desire to make sales, as they seem quite aware that however good an opinion a man may have of his own works, yet the estimate of unbiassed judges is, after all, the surest test, and the publication of actual results enables makers and the public to know the exact standard reached in different years. This was the case also in a more marked degree when the duty of the various Cornish engines was first published some years since, for even a second-rate maker could not but feel himself impelled to improvement when seeing others regularly, month after month, raising more water by a bushel of coals than himself. In all other machines it is the same, and one of the most valuable lessons derived from the labours of the Jury in Class V. will be that part of their Report which shall tell us not merely the comparative merit of different exhibitors, but give also the authentic results obtained, in order that we may have an acknowledged standard as a means of comparing what was in the Exhibition with other plans both former and future.

In reviewing thus rapidly the immense quantity of machinery and models brought before us at the Exhibition, it is quite evident that many valuable contributions have been unnoticed, but the object of these lectures is not so much a description of what was there, as of the probable influence that the Exhibition will have upon the future state of things.

Very many forcible contrasts have been drawn between rival exhibitors, both by themselves and others interested; and there are few, if any, even of the most advanced class,

that have not found themselves outstripped in some point or other, and learned lessons that will show early results. The impulse given to machine-making in every branch is very great; and it will have been found that though in this country, from our numerous mechanical publications, we are tolerably well acquainted with one another's engineering doings, yet it is a very different affair as to our knowledge of what other nations are about. This may be seen in the reaping-machines, now first heard of; in the upsetting all previous notions of the security of our locks; in the lessons taught us as to the hulls and sails of our vessels, and in the superiority evinced in the manufacture of steel rollers from Prussia; none of which were known to us previously, except in a very vague manner.

In one respect I think there has been a great disappointment to all parties, in not finding more hidden mechanical talent brought to light from the working classes than has really been the case; and although it is undoubtedly true that some of them held back from doubt as to the security offered in the shape of provisional registration, yet the very many cases in which advantage has been taken of this registration do not show much apparent value of invention.

I regret very much that the proposal of Mr. Webster to retain and exhibit in one place all the articles thus registered was not carried out, as we should have been much better able to judge truly of the case than now, when they are again scattered among the inventors.

The state of the patent laws has attracted more attention in consequence of the Exhibition than it would otherwise have done, and it is to be hoped this session of Par-

see all the glaring abuses swept away, and the on a sound footing; and in any case I hope any international arrangements as to copyright out, the mutual exchange of information as to granted in each country may be made part of reat deal of valuable time is lost, both in this countries, in reproducing plans of machinery ried elsewhere, and a knowledge of which is obtained by an enormous expense of time and ch is lost both to the inventor and his fellow- al small improvements have been made of late, sing all new patents to be enrolled at one office, urteen years old are all at another: at this ermission has lately been given to make any pencil only, but at the former office, where the are enrolled, it will hardly be credited that pencils must be seen, but even a printed copy compared with the enrolment.

gard to the question of industrial schools now of, it is quite evident that among our me- re is often a very great want of sound infor- any means that will impart this to them will with great good; but in my own experience I people give time in the day to it, and among devote the evening to the purposes of study, truction is generally neglected by them for the g pursuits of literature. This will be found mechanics' institutions generally, where of ..l ight expect to find it otherwise; and in the here mechanical science is studied by those engineering, mechanical publications seem

more in demand than lectures. [illegible] laboratory, or design in its schools [illegible] be followed out except on so large [illegible] or out-of-door works are the only [illegible] recent closing of the Engineering [illegible] started under such fair auspices, [illegible] For these reasons, in any industri[illegible] established, I think it will be foun[illegible] come, so far as engineering is co[illegible] better laid out in the library tha[illegible] indeed, with a few bright excepti[illegible] men who possess both the will an[illegible] audience constantly attentive on t[illegible]

Since the foregoing paragraph [illegible] to working men at the Museum of [illegible] begun, and admission is obtained [illegible] informed that they are very fully a[illegible] hope that they may be successful.

In conclusion, I must not omit [illegible] advantages that this and other [illegible] from the enlightened views take[illegible] name has been such a tower of str[illegible] in its early days, when many look[illegible] and doubt; and it is also due to [illegible] the honour to address that I sho[illegible] tion, as one hitherto totally unco[illegible] its officers and members the earl[illegible] friends of the Great Exhibition h[illegible]

Feb. 11, 1852.

LECTURE XI.

THE ARTS AND MANUFACTURES OF INDIA.

BY

PROFESSOR J. F. ROYLE, M.D. F.R.S.

PROFESSOR J. FORBES ROYLE, M.D. F.R.S.,

ON

THE ARTS AND MANUFACTURES OF INDIA.

The arts and manufactures of India, as brought under our notice by the late Exhibition, form a subject sufficiently extensive to occupy an entire course, instead of only a single lecture. For the arts practised in India are nearly as numerous as those known in Europe until within the last few years. It is evident, therefore, that the time will not suffice for taking more than a glance at some, instead of a minute examination of any, or even a general view of the whole. This, however, is the less to be regretted, as we are still without the details necessary to make the illustrations of these arts and manufactures interesting to the members of the Society of Arts. The individual, moreover, who has to address them being himself practically unacquainted with the working of these arts, must claim the indulgence of an audience, which includes within itself many of the masters of industrial art, especially as he has to embrace so extensive a subject as all the arts and manufactures of a great

country. But others have had an equally difficult task in weighing the results of the exhibition of the products of all countries, each in his own department.

The opportunity is, however, favourable for looking at some of these questions in a general point of view and disencumbered of manufacturing details,—some of them because they are interesting to us, others because they may be beneficial to our fellow-subjects of the East. The latter appears to me the more necessary, for we most frequently hear India spoken of as a farm from which we are to draw our supplies of raw produce, when we want them, or as a field which we have to cover with our manufactures, rather than as an estate we have to improve, and on the inhabitants of which we are to watch the effects of our manufacturing inundations. Therefore, while noticing what may be useful to us, it seems to be desirable to observe what may be beneficial to them; for, freely as the varied products of their soil, and the rich results of their manufacturing skill, have been displayed, the distance of the country, as well as the habits of the people, have combined to prevent the presence of any of their skilled artizans at the real University of the Arts, where so many others have studied in the session of 1851. If any of them had been present, they would have seen the substantial benefits of sending raw produce in a clean and unadulterated state to market, and might have learnt how much some of their manufacturing processes might be abbreviated by the addition to, and modification of, some of their simple, and though rude-looking, yet efficient tools. They might, at the same time, have ob-

served that all innovation is not necessarily improvement, and might also have inferred, that though they had much to learn, yet that they themselves had something to teach, and that they might, without retrograding in taste, retain much of the pleasing results of their ancient civilization.

While treating, therefore, of the arts of an anciently civilized country, it is hardly possible to avoid noticing their antiquity. Nor is it desirable to do so, for though some may conceive that the literature of the arts, and their probable antiquity, deserve only the attention of antiquarians, I am of opinion that it is detrimental to the arts to separate them, so much as is usually the case, both from literature and science. It is owing to such neglect that we have so little information respecting the arts, not only of the ancients, but of many modern nations. For those who are qualified to write are usually unacquainted with, and often despise, the details which it is necessary to describe; while those who formerly practised the mechanical arts seldom took the trouble to describe what they alone knew how to make. As it is still common with us all to depreciate subjects of which we are ignorant, and to over-estimate those which we study, so it is not unusual for the practical man to be wrapped up in his own skill, or what he conceives to be his own original discoveries; and though many of these are due to accident, and others are the legitimate results of careful thought, he seldom inquires what others have done in former times, or are doing in other countries even in his own time. It would not be difficult to show, that had a little more interest been shown in inquiring into

the history of the arts, even of India, many so-called discoveries would not appear to have been made in the nineteenth century; but we might years since have started from points which others had reached even ages before.

Confining ourselves, however, at present to the arts of India, it may appear incredible that we should have remained ignorant till now of the existence of many of these arts, and of the high perfection to which others had been carried among our fellow-subjects of the East, whom many of us had been in the habit of considering as barbarians. A part of this ignorance may be safely ascribed to the limited nature of English education, which so studiously excludes all notice of the arts and sciences; and a part to the indifference which the public have so long displayed towards Indian subjects. But it is to be hoped, that as the restoration to light of the palaces of the ancient Nineveh has revealed the long-forgotten arts of the Assyrians, so may the recent display at the Great Exhibition direct attention to the living arts of a people probably not less ancient, and who are at least as interesting in whatever point we view them.

Though few may deny altogether the antiquity of the arts in India, many may be disposed to limit this antiquity to comparatively recent times. It is desirable, therefore, to get some idea of what we mean when we talk of the antiquity of these arts. But this is a task of some difficulty, from the little attention which the Hindoos themselves have paid to the canons of chronology.

All are familiar with the habit of some authors of referring everything to the East, and of the now pro-

verbial expression of "*ex oriente lux.*" But these terms are so indefinite that we are at a loss to know to what nation they refer, whether to the Persians or to the Babylonians, to the ancient Assyrians or to the still more ancient Egyptians. For all these were early civilized nations. But if it were not from the representations within the tombs of Egypt, or from finding a few specimens of these arts in the disinterred palaces of Assyria, or on the sculptured monuments of Persia, we should be unable to judge, and unwilling to admit, the high perfection to which many of these arts had attained in very ancient times. So in the case of China, if it had not been for the researches of scholars, we should have disbelieved the high antiquity in that country of the manufacture of porcelain and of paper, a knowledge of silk, of gunpowder, of various metallurgical compounds, and of the mariner's compass.

But in all these countries India is referred to, in the earliest times, as an object of admiration or of desire; and though we may disbelieve in the conquest of any part of India by the Egyptian Sesostris, or the Assyrian Ninus, or in the expedition of the Indian Bacchus, yet the very prevalence of such traditions in the earliest times of which we have any record, seems to prove that the country was famed for the richness of its products, and for the early civilization of its inhabitants. We know, moreover, that Alexander the Great found them so more than 2000 years ago, and we find them now hardly differing from what his historians described them to be in his time. The Chinese, moreover, derived their

most popular religion, and one class of their sacred books, from India.

As we cannot trust Indian chronology, we may yet draw some useful inferences from the state of civilization of other Eastern, who were probably contemporary, nations.

Babylon, though one of the earliest cities mentioned in the records of primeval history, disappears from notice until the time of Nebuchadnezzar. But we have references to "the beauty of the Chaldees' excellency," and to "the Chaldeans whose cry is in the ships." The situation of Babylon, at the head of the Persian Gulf, was admirably adapted for commerce; hence it was succeeded by other cities from the time of its destruction to the foundation of Bagdad. Thus the spices of England and Ceylon, together with ivory, ebony, and probably other woods, were obtained; perhaps, also, indigo, and the purple (lac?) dye, mentioned by Ctesias, as well as the gum-resins of Arabia and Africa, and the pearls and cotton of the Persian Gulf. All which were conveyed by the great rivers Euphrates and Tigris to Western Asia and Europe, or by caravans of camels across Arabia to Egypt. Its manufactures were famous in early times, for we read of "Babylonian carpets and tapestry," and of its cloths, as famed for the brilliancy and variety of their hues; and as early as the time of Joshua, among the spoils of Jericho, of a "goodly Babylonish garment."

Nineveh, long accounted the rival of Babylon, was destroyed by the Babylonians and Medes as early as B.C. 606, more than a century before the earliest of the

Greek historians. The Scythians overran the country for twenty-eight years previous, so that the latest of the sculptures must have been as early as B.C. 634. But from the deciphered genealogies, it is probable that the earliest were at least twelve centuries before the Christian era. Mr. Layard has shown, that in their arts and architecture there are many peculiarities which have hitherto been considered as of undoubted Greek origin. The people carved and inscribed not only soft alabaster, but hard basalt; and though they used copper nails, rings, and bands, they also clamped their slabs with iron, and prepared a variety of warlike arms, and worked in gold. They glazed earth, and knew how to make glass beads and cylinders, to dye cloths, and make use of a variety of colours. With the art of weaving they were familiar, and for embroidered works they must have been famous; for their flowing robes, richly bordered and fringed, as well as the caparisons of their horses, display great skill. They used umbrellas on state occasions, as well as the oriental chowree, or fly-flapper, which was probably made then as now with the tail of the yak of Tibet. The dogs of that country, famed for their size and fierceness, were known, and seem to have been maintained in Babylon at very early periods, according to the statements of Ctesias, as well as of Herodotus.

Similar observations might be made on the practice of the arts by the ancient Persians, as represented in the sculptures at Persepolis. But here, differing from both Egypt and Chaldea, we have a people who are the descendants and true representatives of the former occu-

piers of the country. And Mr. Conder has well observed: "In Persia, it is the living scene, the faded yet still imposing pageantry, the various tribes, and the diversified traits of character, that chiefly occupy attention, and by their faithful transcripts of the former ages it is that the imagination is transported far back into the past." It is probable, therefore, that they formerly practised many of the arts which we now see among them. Some parts of the country manufacture coarse china and glass; others are noted for making encaustic tiles of various colours, which ornament many domes, as that of Imam Reza at Mushed. Inkstands and small boxes, adorned with birds and flowers, are made at Shiraz and Ispahan; and in enamelling they particularly excel. The stone-cutters and seal-engravers, &c., are famous. Silks are produced at various places, as well as gold and silver brocades, and their small carpets are admired for the happy arrangement of the patterns and the pleasing harmony of the various and brilliant colours which they employ. The sword-blades of Herat, Mushed, and Shiraz, are highly esteemed, but are all made with steel imported from India; hence "jawabee hind," "an Indian answer," means a cut with an Indian sword, or one made with Indian steel. That India attracted the attention of the Persians at early periods is evident from one of the reports of the death of Cyrus having been caused by the javelin of an Indian while making war on that country. Darius is said to have invaded India, and that some of its provinces formed the twentieth satrapy of his empire; and it was in his siege that Scylax is said to have proceeded

from the Indus, by sea, along the barren lands of Arabia, up the Red Sea to Egypt.

Solomon, again, who appears to have been the ruling power of his age, that is, 1000 years B.C., not only traded with Tyre and Sidon, but, with the aid of the Phœnicians, he established a fleet at Elath and Eziongeber, at the head of the eastern gulf of the Red Sea, to go to Ophir and Tharshish. For we learn, that "the king's (Solomon) ships went to Tharshish with the servants of Hiram; every three years once came the ships of Tharshish, bringing gold and silver, ivory, and apes, and peacocks." Again, "Jehoshaphat made ships of Tharshish to go to Ophir for gold, but they went not; for the ships were broken at Eziongeber." From Ophir were obtained "gold, algum, or almug trees, and precious stones." In my "Essay on the Antiquity of Hindoo Medicine," I some years since observed: "From these several products, especially ivory, apes, peacocks, and pearls, it is evident that only southern countries—whether Africa or India—could have been the object of the voyage. But cinnamon and cassia, nard, calamus, and onycha, having been shown to be peculiarly Indian products known to ancient commerce, there can, I conceive, be no doubt that the west coast of India, and probably, also, the island of Ceylon, were reached even in those early times."—*Essay*, p. 148.

Egypt, we have the most undoubted proofs, was in a highly civilized state at still earlier periods than any of those which have been mentioned, and carried many of the arts to a high degree of perfection even 2000 years

B.C. In the above quoted work, in pointing out the resemblances between Egypt and India, I also observed: "Thus the arts practised by both are very similar, not only in nature, but also in many of the processes which they adopt," as seen in "the representations of the different arts as practised by the former (the Egyptians), figured on their monuments." And again, "So great, indeed, is this resemblance, that it is hardly exaggeration to say, that they might be introduced into a book of modern travels as representations of Hindoo artizans."—*Essay*, pp. 130–133.

The influence which the state of the arts in Persia and Assyria has had on their cultivation by the Greeks of Asia Minor has been shown by Sir C. Fellows, and by Messrs. Layard and Fergusson. If we inquire into the arts of a nation still farther to the west, we may perceive great similarity between them and the arts practised in early times in Eastern countries. The Etruscans were well acquainted with agriculture, as well as other arts, and were the civilizers of a part at least of Italy. They fortified towns by surrounding them with walls and towers. They knew how to work the iron of Elba. They could cast bronze and make silver vases and gold ornaments. They engraved on stone and produced sculptures, and are supposed by some to have invented the arch at a very remote period.

The philosophical Heeren appears to me to have justly ascribed the flourishing state of many of the cities of Egypt, as well as of Babylon, and of such places as Palmyra and Petra, to the trade with India. Many of

the products which formed articles of commerce were such that they could not have been obtained from any nearer locality. Being ourselves situated in a remote corner of Europe, we contemplate the difficulties of these journeyings and voyages from an insular point of view, and consider how we could have undertaken them at those early times; forgetting that the people of Persia and Affghanistan would have found no great difficulty in crossing into India, nor the Phœnicians of the Persian Gulf even in reaching the mouths of the Indus. The Arabs of the Red Sea, even before the discovery of the regularity of the monsoons, might easily have coasted to the Persian Gulf, and gone as far as, or beyond the Phœnicians, to the ancient Barygaza, and been carried from thence to the western or the Malabar coast of India, which is the nearest point where pepper, cassia, and such-like spices, could have been obtained.

There is nothing impossible in these ancient wanderings; in fact, we know that they must have taken place: for the philosophical investigations into the structure of languages have shown a great similarity between the Sanscrit, Persian, Greek, Latin, Teutonic, and Celtic languages, which are now usually called Indo-Germanic, but of late Aryan languages, because this appears to be the oldest name by which the nations speaking these languages called themselves. It is curious, as has been observed, that the Indo-European languages all exhibit the most striking coincidences in words expressive of the first peaceful arts of mankind, while the terms connected with chase or war are mostly peculiar.

Consequently there appears to me nothing improbable in the people of India having been as early civilized as any of the nations I have mentioned. The physical features of the country are such as to have favoured early civilization. Four great ranges of mountains, capable of yielding metallic treasures, guard extensive plains, which are themselves intersected by magnificent rivers. By these fertility is diffused, and communication carried even to the most remote parts of the country. These rivers flow, moreover, into oceans with coasts connected on the south and east with still more eastern countries, and on the west with gulfs which communicate nearly with the south of Europe, or receive the waters of the western parts of Asia.

The climate, moreover, is such as to favour the culture of the soil and the production of a sufficient abundance of food. This would have allowed leisure to some of the people to practise useful arts and to pursue a scientific course of observation, or a philosophical train of thought. Thus, in the most southern parts, there being two rainy seasons, they are able to obtain two crops annually of tropical products. In the northern parts, during the rainy season, they cultivate rice, sugar, and cotton; while in the cold weather, or winter months, they produce wheat and barley; and in both seasons a variety of pulses. The country also affords pasturage for sheep, and grazing for cattle. Thus they had cereals and pulses, as well as milk and butter, for food; and though not abstaining entirely from animal food, they had an abundance of a sufficiently mixed diet. And though they seem also

to have early learned to distil spirits, they seem to me only to want some beverage, such as coffee or tea, which would afford a moderate yet refreshing stimulant. This the present culture of those two useful products in their own country will afford them.

Though the climate is such that calicos and muslins are sufficient clothing for some parts of the year, the calico requires to be padded with cotton at others, and their wools to be converted into blankets.

Facility of obtaining food and clothing having afforded leisure, the Hindoos early took advantage of it for following other pursuits; and though I have no intention of treating of their agriculture, they seem early to have ascertained the advantages of a rotation of crops, and likewise of drill-husbandry, for Theophrastus mentions their cotton being planted in lines. Their drills are simple and cheap, sometimes convertible into harrows by removing the bamboos fixed into holes behind the teeth of the harrow.

That they did not confine themselves to this, or indeed to any one subject, we have the proofs in the variety of writings which we have upon all subjects,—some them still locked up in the original Sanscrit, but, unfortunately, all of somewhat doubtful chronology.

The Hymns of the Vedas are considered to have been composed at least 1200 or 1300 years B.C.,—by Mr. Colebrooke, in the fourteenth century B.C. In the Rig Veda, which has been lately translated by Professor Wilson, he observes of these hymns, that they are composed in a great variety of metres; and of the Hindoos he says,

"At this period a pastoral people they might have been, to some extent; but they were also, and, perhaps, in a still greater degree, an agricultural people, as is evidenced by their supplications for abundant rain, and for the fertility of the earth, and by the mention of agricultural products, particularly barley" (p. 57). "They were a manufacturing people; for the art of weaving, the labours of the carpenter, and the fabrication of golden and of iron mail, are alluded to; and, what is more remarkable, they were a maritime and mercantile people."—*Rig Veda Sanhita.** *Translated by H. H. Wilson.*

The Institutes of Manu are considered to date from 800 B.C., and the great Sanscrit epics from the commencement of our era. These have been followed by works on grammar, logic, and philosophy. Of their systems of philosophy, Sir W. Jones said: "We now

* As the religion of the Rig Veda differs so much from what is now prevalent in India, I have heard it stated as probable that these hymns were not written in India. But, looking to the internal evidence of the natural history subjects which are alluded to, I can see no grounds for this objection. Without alluding to the elephant supposed to be mentioned at p. 175; porpoises, p. 312, are likely to have been met with in the Ganges or Indus; and the spotted deer, pp. 109, 110, in every part of India. Bamboos, p. 24, and the *Kusa* grass (*Poa Cynosuroides*), are strictly Indian plants. But the *Soma* plant, which with its juice are so frequently mentioned (*vide* p. 6, &c.), is so peculiar in India, with its round, smooth, twining, leafless stems and branches filled with a mild wholesome acid juice, that it is almost enough of itself to fix the country of many of the hymns. It was called *Asclepias acida* by Dr. Roxburgh; but now a genus, *Sarcostemma*, has been formed, containing three or four species, which are all similar in habit. It is curious that these plants are not met with in the Gangetic valley, but they are found on the dry Coromandel coast. The species described by Dr. Roxburgh is found in hedges, but is by no means common there. But in the

live among the professors of those philosophical tenets, which the Ionic and Attic writers illustrated with all the beauties of their melodious language." "The six philosophical schools, whose principles are explained in the Dersana Sastra, comprise all the metaphysics of the old Academy, the Stoa, the Lyceum; nor is it possible to read the Vedanta, or the many compositions in illustration of it, without believing that Pythagoras and Plato derived their sublime theories from the same fountain with the sages of India."

In the mathematical sciences, the Hindoos were acquainted with the decimal notation by nine digits and zero. In algebra, Mr. Colebrooke found reason to conclude that the Greeks were far behind the Hindoos. In geometry they were acquainted with the proposition that the square on the hypothenuse of the right-angled triangle is equal to the squares of the sides containing

western states of India it is stated to be found on Perim island, on the rocky hills about Loonee, on the barren parts of plains between Dowlatabad and the Godavery, and throughout the Deccan. A similar species is found in Arabia. Hence it would appear that, if the Brahmins made use of this plant, they must have done so on the western side of India, that is, in the countries now forming the Bombay Presidency, and this would account for the early Hindoos having been acquainted with the sea. It must have been from this side that the spices of the East first reached Egypt, and it is on this side that all the great Cave temples are situated, and some of these may have been early Brahminical, and not all Buddhistical. It has further been inferred, and apparently with good reason, that the *Phoke* plant met with by Mr. Elphinstone all across the desert in his route from Delhi to Bahawulpoor, and again after leaving Mooltan, is the same sacred plant. Mr. Griffith met with it in abundance between Dadur and the Bolan Pass, but he mentions it under one of its old names, that of *Apocynum viminale*. The Hindoos must have come through the Punjab.

the right angle. The circumference of the circle they divided into 360 equal parts, and each of these into 60 others, and so on, similar to our division into degrees, minutes, and seconds. The ratio of the diameter to the circumference they supposed to be as 1 to 3·1416; and though the Chinese required first the Arabs, and then the Jesuits, to assist them in settling the true number of days in the year, the Hindoos conceived it to consist of 365 days, 5 hours, 30 minutes, 40 seconds; a determination which (as Sir D. Brewster says) differs only 1 minute 33 seconds from that which is employed in the new solar tables of Delambre.*

It may be, and indeed has been, supposed by some, that the principles of the above sciences may have been obtained by the Hindoos from the Greeks through the

* Professor Wilson, who is well acquainted with the Hindoos, has pronounced them "an intelligent, and interesting, and amiable people," and also "an acute and argumentative people;" likewise, that "the Indian mind, even amongst the least instructed, has a ready tendency to contemplative reflection, and delights in subtle and metaphysical research;" and although the people throughout the country are at present sunk in gross idolatry, we might adduce both the original Brahminical and the Buddhistic religions as instances of their contemplative habits, as well as of the elevated ideas which they entertained of the Deity;—*e.g.* "I am like nothing human, with which to compare myself." The worshipper is directed "to adore God alone, know God alone, give up all other discourse," and not only "that none but the Supreme Being is to be worshipped," but that "ministration to idols in temples is held by ancient authorities infamous." Manu repeatedly classes the priests of a temple with persons unfit to be admitted to private sacrifices, or to be associated with on any occasion; and even still, the priests who attend upon the images in public are considered as of a scarcely reputable order by all Hindoos of learning and respectability.—*See* Wilson "On the Hindoos," and Maurice "On the Religions of the World."

medium of the Arabs, or from the Greek government of the successors of Alexander in the north-western frontiers of India. But the philosophers of Greece travelled to far Eastern countries at still earlier periods, in search of information from the sages of the East; and, as I have already observed in the above Essay, though ideas may travel from north to south, and from west to east, yet tropical products can only travel in our hemisphere from south to north, and I think we may infer that in ancient times they could only have been conveyed from east to west. It is not surprising, therefore, that the arts should have originated or been carried to a considerable degree of perfection, even in ancient times, among such a people, provided that they had the raw materials of different kinds to work upon. That these are, and must always have been, abundant in their country, is evident from the extensive collection of them which was sent to the Exhibition suited for all the different arts and manufactures. Some of these must have given them facilities for practising some of the arts; for instance, the hollow bamboo enabled them to construct the drill-plough, funnels, and blow-pipes; the shell of the cocoa-nut and of gourds, ladles, and vessels to hold fluids; the palmyra leaf, materials for mats, fans, and thatching.

The arts and sciences, as known to the Hindoos, were reckoned, according to Abul Fuzl, to be about three hundred in number. Upon this Sir W. Jones observes, that as the sciences are comparatively few, we may conclude that they anciently practised as many useful arts as ourselves. The Silpi Sastra, however, which is a Sanscrit col-

lection of treatises on arts and manufactures, is said to enumerate only sixty-four; but if these are the leading arts, they must each embrace a number of subordinate divisions.

That many of these arts have long been practised we have a variety of proofs, as in their rock-cut temples and in the dresses and ornaments of their idols, and also that some of them have been recognised, and even supported, by being connected with the village system of the Hindoos. This seems to be proved by some very interesting documents, to which attention has been called by Colonel Sykes, that is, to the characteristic signatures of different witnesses to leases and agreements about land. Thus, as they were unable to write, in place of our universal ×, each draws the symbol of his occupation: a plough by a cultivator, a gimlet by the carpenter, a pair of pincers by the iron-smith, the shopkeeper a pair of scales, while the banker signs with the delicate bankers' scales, though it is probable he could also write, for we find even those classes who can usually write signing in the same way; for instance, the priest with a rosary of beads, and the village astrologer with an almanac. These probably used symbols that might be intelligible to the others who could not write.

Indeed, it appears to me that it has been owing in a great measure to the municipal institutions, that is, to the village system of the Hindoos, that we are to ascribe the permanence of the arts in India; for so often as the storm of conquest has swept over the plains of India, we yet see the arts continuing to flourish in the very places where

they had attained their pristine excellence. Something of this is no doubt due to the system of castes, but also to the Hindoos bending like willows to the storm, and to their returning to the village lands, in which so many have a share, when it has passed over. These, of course, drew to them many of those trades which depended upon them for support.

In proceeding to make observations on the arts and manufactures of India, as shown at the Exhibition, it is, in the first place, necessary to inquire whether the specimens exhibited were the ordinary products of the country, or were specially prepared for the Exhibition. From the shortness of the time between the announcement and the opening of the late Exhibition,—for the time, for so distant a country as India, was very short,—few things could be prepared with the care that might have been bestowed if more time had been allowed: and yet very little time was lost. Our illustrious President having finally determined on the nature and objects to be embraced within the proposed Exhibition, in the middle of July 1849, the Court of Directors of the East India Company were among the first, if not the very first, of the public bodies of this country who determined to support the undertaking, as they did this in August 1849. I was directed to prepare a list of the things procurable in India, which were suitable to the Exhibition. This was done in conformity to the comprehensive views which had been promulgated. Lithographed copies of the lists which had been prepared were sent out by the mail of the 7th of January, 1850, and were issued from the Government

House at Calcutta on the 22d of February, that is, the day after the "Classified Lists of Objects which may be admitted into the Exhibition" were promulgated from the Palace of Westminster.

As the arrangement of the arts in the jurors' lists and catalogues of the Great Exhibition, though productive of great convenience, is not so well suited for general observations, in consequence of some which are closely allied to each other in their scientific principles being separated from each other, I propose treating of the arts and manufactures of India under the heads of—1. Chemical Arts; 2. Textile Arts; 3. Manual and Mechanical Arts; 4. Fine Arts.

1. Chemical Arts.

The arts which are strictly chemical may be supposed to have originated only in a country where the science of chemistry had made some advance, but the Hindoos are not usually supposed to have paid any attention to this subject. The Egyptians are thought to have practised, and the Arabs are acknowledged to have been the first who wrote on the subject; but their earliest chemist, Geber, acknowledges that he had only abridged the information to be found in the books of ancient philosophers. That the Hindoos were among these, I have attempted to prove in a separate work,* where I have shown the probability of the Arabs having obtained much of their information from Sanscrit works, still in existence.

* "Essay on the Antiquity of Hindoo Medicine."

CHEMISTRY, it has been inferred, must have originated in alchemy; but it appears to me that it must have originated wherever the arts began to be practised: for in seeing the wonderful changes which take place during the action of heat, and some of the most common re-agents, people may easily have been led to believe even in the transmutation of metals.

We know from a variety of sources, that the Hindoos have long been acquainted with many chemical substances, as well as that they have practised many chemical arts. The ordinary metals, including tin, they have long known, and have prepared the oxides of iron, lead, tin, and zinc. The ashes of plants in a country of wood fires, led them to the discovery of potash. Soda is found effloresced on the soil, as well as crystallized on the margins of some of their lakes. The Arabic name, *sagimen*, indeed, seems to be derived from the Hindoo *saji-noon*, that is, *sajji*, or soda-salt. Nitre must have been produced then, as now, in their soil, and borax imported from Tibet, while sal-ammoniac must have been produced ever since they made bricks, as they now do. Alum they obtain by throwing potash on alum slate, which has been some time exposed to the air. Among the salts of the metals, we find the sulphates of copper, of zinc, and of iron, the acetates of copper and of iron, and the carbonates of lead and of iron. They seem, also, to have been long acquainted with the three mineral acids, for making which they have peculiar formulæ, while their lemons and limes gave them citric, and the gram-plant (*Cicer arietinum*) the oxalic acid.

It is evident, therefore, that the Hindoos possessed

many chemical substances, and that they prepared others; hence we might infer that they may have practised some of the chemical arts, as, indeed, we know they must have done from other sources. But this would equally prove that they must have possessed various chemical substances, whencesoever obtained.

Pharmaceutical Products.— In the present state of the chemical arts, advanced as they have been by the cultivation of the science in Europe, it was not to be expected that such products as are obtained by the natives of India, by their original and primitive processes, could be sent to the Exhibition with any hope of attracting attention. Few, therefore, have been sent from the bazaars of India, except as curiosities. But there are others, prepared under European superintendence for the use of the public service, which are excellent in quality; and I know not why India might not under such superintendence prepare some that might become articles of commerce: such, for instance, as benzoic and citric acids, the salts of morphia, narcotine as an efficient substitute for quinine in a number of cases; with some extracts and tinctures of substances which lose their effect by transmission and the influence of physical agents.

The sulphate of magnesia is interesting as prepared from magnesite, or the natural carbonate of magnesia of the Peninsula.

Metallurgy.—Though it is difficult to understand how a primitive people could have overcome the difficulties of smelting iron and of forging steel, yet as we know from a variety of sources that the Hindoos have long known

both, they must have overcome the difficulties which have stopped others. But it is hardly less wonderful to see a native with no other tools than his hatchet and his hands proceed to smelt iron, which he will convert into steel capable of competing with the best prepared in Europe. For this the prevalence of the black oxide of iron, in the state of iron sand, and the common use of charcoal as a fuel, give him some facilities, while he prepares a furnace with clay, and makes bellows with the leaves of the forest. [Of this last, a specimen was shown from the hills of Mirzapore.]

Iron and steel, though not known in the earliest periods of the history of some of the civilized nations of antiquity, have yet been known from very early periods. Iron is mentioned as being applied to a variety of purposes in the earliest chapters of the Bible. But as it is too soft to be used for all the purposes stated, it has been justly inferred that they must have known of modes of hardening it, and reference is made to that kind which is called "northern iron." But as the term of "northern" is also applied to the roads of commerce and of conquest from the East, because these entered Judæa by the north, that is, by way of Damascus and Syria, so Mr. Aikin looks to the countries east of Babylonia as those where this hard iron or steel was produced; and this is confirmed by the passage in Ezekiel, where Dan and Javan are described as bringing "bright iron, cassia, and calamus," which are all Indian products, to Tyre.

The Hebrew name of steel, *paldah*, is evidently the same word as the Arabic *foulad*, which is also in use

in Persia, where Indian steel is known by the name of *foulad-i-hind.* Even now the best Persian swords are made with steel imported from India, and Mr. Wilkinson has ascribed the markings on the famed Damascus blades to their having been made with Indian steel, which has long formed an article of trade from Bombay to the Persian Gulf.

Mr. Heath, at one time the managing director of the India Iron and Steel Company, and whose steel obtained a prize at the Exhibition, even says, "We can hardly doubt, that the tools with which the Egyptians covered their obelisks and temples of porphyry and syenite with hieroglyphics, were made of Indian steel." There is no doubt, that the ancient Indian temples and fortresses were carved with steel instruments, as they are at the present day. That they made steel which was highly valued in the time of Alexander the Great, is evident from Porus making him a present of about thirty pounds of steel; and still earlier, in the Rig Veda, we read of chariots armed with iron weapons, of coats-of-mail, arms and tools of different kinds, and of bright-edged hatchets.

Various descriptions of the manufacture of iron and steel have been given by observers in different parts of India; all of which bear a considerable resemblance to each other. Some of these Mr. Aikin carefully noticed when he lectured on this subject in this very place; but Mr. Heath has, I think, given the best explanation of the Indian processes.

Mr. Heath describes the ore used as the magnetic oxide of iron, consisting of seventy-two per cent of iron

with twenty-eight of oxygen, combined with quartz, in the proportion of fifty-two of oxide to forty-eight of quartz. It is prepared by stamping, and then separating the quartz by washing or winnowing. The furnace is built of clay alone, from three to five feet high, and pear-shaped; the bellows is formed of two goat-skins, with a bamboo nozzle, ending in a clay pipe. The fuel is charcoal, upon which the ore is laid, without flux; the bellows are plied for four hours, when the ore will be found to be reduced: it is taken out, and while yet red-hot, it is cut through with a hatchet, and sold to the blacksmiths, who forge it into bars and convert it into steel. In an old account which I possess, written on the spot, apparently in Mysore, it is said, that one pound and a half of iron is heated lower than red heat, and then beaten for about three minutes with a stone hammer on a stone anvil. Experience having taught them, they say, that instruments of iron ruin the process. Mr. Heath says the iron is forged by repeated hammering, until it forms an apparently unpromising bar of iron, from which an English manufacturer of steel would turn with contempt, but which the Hindoo converts into cast steel of the very best quality. To effect this he cuts it into small pieces, of which he puts a pound, more or less, into a crucible, with dried wood of the *Cassia auriculata*, and a few green leaves of *Asclepias gigantea;* or, where that is not to be had, of the *Convolvulus laurifolia*. The object of this is to furnish carbon to the iron.

As soon as the clay used to stop the mouths of the crucibles is dry, they are built up in the form of

an arch in a small furnace, charcoal is heaped over them, and the blast kept up without intermission for about two hours and a half, when it is stopped, and the process considered complete. The furnace- contains from twenty to twenty-four crucibles. The crucibles are next removed from the furnace and allowed to cool; they are then broken, and the steel taken out. The crucibles are formed of a red loam, which is very refractory, mixed with a large quantity of charred husk of ricc.

Mr. Heath, after observing on the astonishing fact of the Hindoos having discovered the way of making steel at such early periods, refers to Mr. Mushet's discovery of converting iron into cast steel by fusing it in a close vessel, in contact with any substance yielding carbonaceous matter, and then to that of Mr. Mackintosh, of converting iron into steel, by exposing it to the action of carburetted hydrogen gas in a close vessel at a very high temperature, by which means the process of conversion is completed in a few hours; while by the old method it was the work of from fourteen to twenty days. Mr. H. observes :—

" Now, it appears to me that the Indian process combines the principles of both the above described methods: on elevating the temperature of the crucible containing pure iron and dry wood, and green leaves, an abundant evolution of carburetted hydrogen gas would take place from the vegetable matter, and as its escape would be prevented by the luting at the mouth of the crucible, it would be retained in contact with the iron, which at a high temperature appears from Mr. Mackintosh's process to have a

much greater affinity for gaseous than for concrete carbon: this would greatly shorten the operation, and probably at a much lower temperature than even the iron in contact with charcoal powder. In no other way can I account for the fact that iron is converted into cast steel by the natives of India in two hours and a half, with an application of heat that in this country would be considered quite inadequate to produce such an effect; while at Sheffield it requires at least four hours to melt blistered steel in wind furnaces of the best construction, although the crucibles in which the steel is melted are at a white heat when the metal is put into them, and in the Indian process the crucibles are put into the furnace quite cold."

By such simple methods the Hindoo prepared steel, which has long formed an article of commerce from the west of India to the Persian Gulf, and there is every probability of its being used in larger quantities if it were easily procurable in sufficient quantities, as manufacturers here have expressed a desire to employ it. In the arms which we have had exhibited, as well as in the edges and points of the tools, we see its admirable fitness for the fabrication of all cutting instruments.

Among the Arms we have a display of such as would appear to belong to different ages of the world, but which are all actually in use in India at the present day; such as chain and scale armour, both for man and horse, helmets and shields, spears, battle-axes, bows and arrows, with daggers in every variety. Some of these display in a remarkable manner their skill as cutlers; as, for instance, the sword formed of two blades, and another in which

pearls are let into the centre of its blade; and still more in the daggers contained one within another, all of hard steel, with the line of junction so beautifully welded as to be hardly perceptible even with a magnifier,—so also in the dagger, which on striking separates into five blades, as these are most nicely brought into juxtaposition. The twisting of gun-barrels and the damasks of their blades of steel have been imitated in all countries. These beautiful specimens have been sent chiefly by the native princes of the north-west of India from Puttéala to Scinde, as well as from the central government of Hyderabad.

The other metal which it seems necessary to mention is tin, because connected with so many metallurgical compounds, and because by many it has been supposed that this country was the only source from which that metal was obtained in ancient times. But it exists in large quantities in the Malayan Peninsula, as well as in Banca, Borneo, and many other islands. Tin, we know, was employed by the Egyptians, because it forms an ingredient in some of their metallic compounds; but its use has long been familiar to the Hindoos for forming various metallurgical compounds, as well as for tinning copper. As it occurs as an oxide, and near the surface of the soil in large quantities, and requires only charcoal for reducing it, we may suppose it would easily have been discovered by a people who forged iron and made steel. As the nations of antiquity employed tin for hardening copper, and used the alloy for forming swords and spear-heads, so the natives of India form various compounds with copper and tin, which are remarkable for their hardness, and for

the fine sounds which they emit on being struck. Dr. Wight lately found that an alloy of ten grains of copper to two and a half grains of tin was the best mixture which a native made in his presence. British spear-heads are found to consist of one of tin to ten of copper, and a knife, of one of tin to seven and a half of copper. Mr. Aikin, in his experiments, found that eight grains of copper to one of tin formed the hardest alloy.

Alloys.—The natives of India are acquainted with a variety of alloys for making utensils and even ornaments, as with copper and zinc, tin and lead, besides being great workers in copper and brass for the various utensils employed for domestic purposes, and of which so large a variety was sent from different parts of India.

Bidery.—A metallurgical compound of considerable interest is that which has been named Bidery, from Bider, a city situated about sixty miles to the north-west of Hyderabad, and of which we have had a variety of articles at the Exhibition. Most of these have been greatly admired for the elegance of their form, as well as for the gracefulness of the patterns with which their surface is engraved. Though the groundwork of this composition appears of a blackish colour, its natural colour is that of pewter or of zinc. Dr. Heyne informs us that it is composed of copper sixteen ounces, lead four ounces, tin two ounces. These are melted together, and to every three ounces of the alloy sixteen ounces of spelter, that is of zinc, is added, when the alloy is melted for use. But to give the whole the black colour which is esteemed, probably from bringing out the pattern, it is dipped into

a solution of sal-ammoniac, saltpetre, common salt, and blue vitriol.

Dr. B. Hamilton saw of zinc 12,360 grains, copper 460 grains, and lead 414 grains, melted together, and a mixture of resin and bees-wax introduced into the crucible to prevent calcination. It was then poured into a mould made of baked clay, and the article handed over to be turned in a lathe. Artists then inlay flowers or other ornaments of silver or of gold. They first rub it over with sulphate of copper and water, which gives the surface a blackish colour, and enables the artist more easily to distinguish the figure which he draws,—this he does with a sharp-pointed instrument of steel, and cuts it with small chisels of various shapes, and then with a hammer and punch fills the cavities with small plates of silver, which adhere firmly to the Bidery. It is then polished and stained as described above. The various articles made from it are vases, wash-hand basins and ewers, hookah-bottoms, spittoons, cups and dishes, small boxes and weights. These are inlaid commonly with silver, but sometimes with gold. The patterns are usually as much to be admired as the forms of the vessels. Though usually called Bidery, sometimes Vidry, it is also manufactured at other places. Specimens have been sent both from Bider and Aurungabad, in the Nizam's territories, from his Highness the Nizam and his minister, Siraj-ool-Moolk, which are particularly beautiful. Some also from north-west India, and from Bengal; the latter, however, was inferior to the others in workmanship. Bidery does not rust, yields little to the hammer, and

breaks only when violently beaten. According to Dr. Hamilton it is not near so fusible as zinc or tin, but melts more easily than copper.

Glass.—Glass is one of those discoveries which could hardly escape being made by any people who employed furnaces to reduce metallic oxides; for the necessary ingredients must often have been present, and the heat was sufficient. Beckmann has observed, that the discovery of coloured glass must have followed very soon that of making glass itself. It is probable, however, that coloured glass was made previous to colourless glass. For it is difficult to find materials pure enough to make good glass, and it would be some time before the original makers would find out the causes of discolouration.

The natives of India seem to have been long acquainted with making different ornaments of glass: for instance, armlets and anklets, while rings of glass form a part of their warping reels. Small glass bottles are also made; but all that I have seen are of a more or less greenish colour. The green is called *kanch*, and the purer glass, *sisi*. It is probable that the extensive diffusion of oxide of iron in the Indian soil, which may have led to the discovery of iron, has prevented the making both of good glass and of good pottery. That this is not incompatible with a knowledge of the method of making imitation gems, seems proved by the same having been the case in the time of Pliny; who states that great value was set upon glass quite free from colour, which was called crystal. He also mentions artificial hyacinths, sapphires, and all kinds of

black glass; and we know that the glass-houses of Alexandria were celebrated among the ancients.

One of the simplest processes for making glass is that practised in the district of Behar. The saline efflorescence of the soil, which is an impure carbonate of soda, is collected and thrown into a cistern lined with clay. This is then filled with water, which is afterwards allowed to evaporate. When dry, the bottom of the cistern is found covered with a thick saline crust, the earth which was intermixed having subsided before the salt began to crystallize. This soda makes glass without any addition, as it still contains a sufficient portion of siliceous matter. They make blackish and greenish glass: a bright grass-green is made by additions of oxide of copper; and a blue glass by the addition of *rung*. In Mysore the process is more elaborate. Powdered white quartz, one part, being mixed with prepared soda, six parts, is filled into a crucible capable of containing 5½ Winchester gallons. About fifty of these crucibles are placed in a furnace, and the fire kept up for five days, when a frit is produced, with which they make a black, green, red, blue, and yellow glass, by means of additions of oxide of copper, of an ore called *kemudu*, and of a blue substance called *runga*. What these are I have not been able to discover. Though the making of glass has made but little advance in India, the natives work up broken English glass even into barometer and thermometer tubes, &c. Glass globes, silvered in the inside, were sent from Delhi, but unfortunately got broken in the transmission. The mode of effecting this silvering is not mentioned, but an

amalgam of quicksilver is probably employed, as, on the application of moderate heat, the silvering becomes dissipated. An art similar to this has of late years been discovered in this country.

Enamelling.—Enamelling, or the art of fixing colours by melting in fire, is of very ancient date: it was practised by the Egyptians, and carried to a high degree of perfection in Persia. The art is known in every part of India, and some exquisite specimens were sent to the Exhibition, both from Central and from North-western India. It is chiefly employed in ornamenting arms and jewellery, not only in gold, but also in silver.

Enamels being vitrifiable substances, to which peculiar colours are given, we may compare the Indian with the European methods of making enamel. In general, ten parts of lead and three parts of tin are oxidized by continued heat and exposure to air. To the mixed oxides add ten parts of powdered quartz, and ten parts of common salt, and melt in crucibles. Thus is obtained a white enamel, and the basis of coloured enamel, metallic oxides being added. The oxide of lead or of antimony produces a yellow enamel: reds are obtained by a mixture of the oxides of gold and iron. The oxides of copper, cobalt, and iron, give greens, violets, and blues; and a variety of intermediate colours by mixtures. The workmen of Behar are stated to make two enamels, which are applied to the surface of some of the rings. One is yellow: five parts of lead are melted in a shallow crucible, and to these is added one part of tin; and the alloy is calcined for four or five hours. It is then heated to redness in the crucible

of the glass-furnace. One part of white quartz is next added, and the mass stirred about for three hours. It is then taken out with a ladle, poured out on a smooth stone or iron, and cooled in water. They then take one part of their palest green glass, and add a fourth part of the other materials, to make the yellow enamel.

The green enamel is made in the same manner; and to the melted glass is added, not only the prepared lead and tin, but a small portion of the black oxide of copper.

In Mysore they make a bright yellow enamel, by first calcining five parts of lead and one of tin, then adding one part of zinc, calcined in a separate crucible. When these begin to adhere they are powdered in a mortar. When the maker of glass rings is at work, he melts some of this powder, and while the ring is hot, with an iron rod applies some of it (the powder) to the surface of the glass.

Pottery, Encaustic Tiles, Cements.—The art of fashioning clay into vessels of a variety of shapes, and hardening it by the action of heat, is one of the most ancient of the arts. Fragments of pottery are everywhere found among the ancient cities of India, as in those of other parts of the world; pottery, as Brogniart has remarked, affording the best record of the early ages of man, as bones do of the earth.

So little is known of Indian pottery, that it is usually described as being hemispherical in shape. Some of it is no doubt so, for the convenience of being carried on the head; but it is a fact, that in the recent exhibition of Indian pottery, numbers of the best judges have greatly admired its elegant, even classical gracefulness of form.

It is also stated to be black, and red, or yellowish. The clays which are generally employed in the more populous parts of the country, Dr. O'Shaughnessy has observed, "contain so much oxide of iron and carbonate of lime that the vessels melt into a slag at a temperature little above that of redness." "Deposits of a black stiff clay, containing much vegetable matter, occur in some districts; vessels made with it sustain a higher temperature." Clays capable of bearing great degrees of heat have, however, been discovered in different parts of India. As one great object is to have porous vessels for cooling water, the ordinary clays answer sufficiently well for this purpose; and some of the forms, as that of the tortoise-shaped, expose a large surface to the air. The Hindoos, moreover, never use a vessel the second time, so no great expense will be incurred by them; thus encouragement is wanting to improve the nature of their pottery. But very successful experiments have been made to make improved pottery in India, as by Mr. Julius Jeffreys, the ingenious inventor of the respirator, who succeeded in making stone-ware soda-water bottles, crucibles, fire-bricks, tiles, &c.; which seem to have been glazed by the silica uniting with the alkaline ashes of the furnace. Dr. O'Shaughnessy greatly improved the pottery in use in the dispensary of Calcutta, and which he glazed with the borate of lime. The glazed pottery of Pegu, of which two very large jars were sent, has long been known for its glaze not being affected by acids. Dr. Hunter has sent some excellent specimens of pottery from the School of Arts at Madras, and for which a prize has been awarded.

The ancient potter's wheel is the instrument with which the Hindoo works; and while it revolves, with the aid of his naked hands he fashions vessels of elegant forms, many of which have been admired as being of classical shapes, and some would appear almost as if they were of Etruscan origin: but there is no reason to believe that the Hindoos have ever had anything but their own unerring taste to guide them. This beauty of form is equally conspicuous in the pottery of Sewan near Patna, as in that of Azimgurh or of Ahmedabad, of Mirzapore, or of Moradabad.

Some of it is remarkable, also, for its extreme thinness and lightness, showing the great skill of the artist, and making it difficult to understand how it kept its shape when in a plastic state, as I cannot learn that the turning-lathe is used to give a finish to any of the articles. The painted pottery of Kotah, and the gilt pottery of Amroha, have also been admired. The handles and the various ornaments of the Ahmedabad pottery are no doubt attached, as in Europe, by means of slip. From the specimens of basket-work pottery sent, there is no doubt that, with better materials and a little instruction, the natives could excel in this as in the forms of their pottery.

If we had no other information, we might yet infer from the crucibles employed by the goldsmith, by the workers in brass, and by the makers of cast steel, that some very infusible clays are to be found in India; but recent investigations have proved that crucibles and fire-bricks, superior in infusibility to those made of Stour-

bridge clay, have been made in India; and from the white goblets of Arcot, and the light-coloured pottery of Madras, as well as from the white bricks sent from the Ceded Districts, we see that there are many useful clays without the usual admixture of iron.

As connected with pottery might be mentioned the variously coloured *Encaustic* tiles, which have been used for the domes of some of the tombs near Delhi and Agra, as well as in Southern India; but I cannot learn that the art is at present practised. It was probably introduced by the Mahomedans from Persia. Specimens from some of these tombs were shown by Mr. Boileau.

I might have proceeded to notice their knowledge of *Cements*, but I may in preference notice a kindred art, and which seems capable of adoption elsewhere when suitable; that is, the skill with which they give a facing of marble to a wall of brick. This they usually do by employing mortar made of shell-lime; but I found some made from pure limestone equally good. A thin layer of this fine white cement being spread, is brought to the lustre of marble by a process similar to burnishing.

Bleaching. — Bleaching is practised in all parts of India, and some places, which are also seats of the cotton manufacture, are famous for bleaching, such as Dacca and Baroche. This has been ascribed to the excellency of the water in the neighbourhood of these places. A very good account has been given by Mr. Taylor,* late of Dacca, of the process of bleaching at that place. This is parti-

* "An Account of the Cotton Manufacture in Dacca," &c. Published by Mortimer.

cularly interesting, as including what are called modern discoveries.

Fine muslins are merely steeped in water, other cloths are first washed. But all, of whatever texture they may be, are next immersed for some hours in an alkaline ley composed of soap and of sajie muttee, that is, impure carbonate of soda. They are then spread over the grass, and occasionally sprinkled with water, and when half dried are removed to the boiling-house in order to be steamed. This is effected by twisting the cloths into the form of loose bundles and placing them upon a broad clay platform, which is on a level with, and surrounds, the neck of a boiler sunk into the ground. They are then arranged in circular layers, one above the other, around a bamboo túbe, which is kept upright by means of transverse supporters projecting from it, the whole forming a conical pile that rises to a height of five or six feet above the boiler.

The fire is kindled in the excavation below, and as the ebullition of the water proceeds, the steam diffuses itself through the mass of the cloths above, swelling by its high temperature the threads of the latter. The operation of steaming is commenced in the evening, and continued all night till the following morning. The cloths are then removed from the boiler, steeped in alkaline ley, and spread on the grass as on the preceding day, and again steamed at night. These alternate processes of *bucking* and *crofting*, as they are technically called, during the day, and of steaming at night, are repeated for ten or twelve days, until the cloths are perfectly bleached. After the

last steaming, they are steeped in clear filtered water acidulated with lime-juice, in the proportion, generally, of one large lime to each piece of cloth. Lime-juice has long been used in bleaching in all parts of India, and Tavernier describes Baroche as famous as a bleaching station, on account of its extensive meadows and the large quantity of lemons reared there.

Mixed fabrics of cotton and Muga silk are steeped in water mixed with lime-juice and coarse sugar, which latter article is said to have the effect of brightening the natural colour of the silk.

Dyeing, Calico-printing, and Printing in Gold.—The art of dyeing is no doubt of very ancient date, and one with which the Hindoos have long been well acquainted. Their country produced all the raw materials for producing a great variety of colours; some of these are of so conspicuous a nature, such as the large flowers of plants, that the desire must early have occurred to transfer these colours to the person in savage nations, or to the clothes of so early civilized a people as the Hindoos. This could easily have been done with the fugitive colours, but as they know how to make a colour like that of indigo, which undergoes a considerable degree of chemical change during its formation as well as while applied to the dyeing of its blue colour, it is evident, even if we had no other information on the subject, that they must have paid attention to some chemical subjects. But we know that they have long possessed, and knew how to manufacture, the several salts which have long been employed as mordaunts.

That the art of dyeing was early practised we have the

proof in the fact mentioned by Pliny, that flags of various colours were displayed by the Indians. It has been supposed that the Hindoos may have learned this art from the Egyptians, but the probability is as great that the latter learned the art from the former, from whom also they probably obtained the alum which was celebrated by the name of Egyptian alum. Alum is still manufactured in Cutch; the natives of India have long known the use of sulphate of iron and of acetate of iron. The latter they prepare by macerating iron in sour palm-wine, or in water in which rice had been boiled. The alkalis and acids with which they are acquainted may have assisted them in changing the shades of colours. It would take too much time to enter into the details of these dyeing processes, many of which are, however, now well known, and seem to have been the original of many of those followed in Europe until very recent times. The Exhibition has shown that they can dye every colour, and of a great variety of shades, and that, in a complicated pattern, they know the value and power of each in contrasting the effect of others, so as to produce an harmonious whole.

The art of *Calico-printing* is another of those which was common to the Egyptians and Indians, and is still largely practised by the latter, and with a skill which produced much to be admired even in the midst of the productions of the world, and after so many attempts have been made to improve an art certainly imported from the East. Pliny was acquainted with the wonderful art by which cloths, though immersed in a heated dyeing liquor

of one uniform colour, came out tinged with different colours, and which afterwards could not be discharged by washing. The Indians were found practising the art when first visited by Europeans. The mordaunts they apply both by pencils and by engraved blocks, though it has been said that the former method was the only one employed. Blocks were sent from Cossipore, and are used in Mysore and in Central India; some specimens of silk handkerchiefs were exhibited by Mr. Warrington, to show the different stages of dyeing as practised in India. In one, the parts where the round spots were to be, were tied up with thread so as not to be affected by the dye-liquor.

The cloth-printers at Dacca are employed to stamp the figures on cloth which is to be embroidered. The stamps are formed of small blocks of khutul (*artocarpus*) wood, with the figures carved in relief. The colouring matter is a red earth imported from Bombay, probably the so-called "Indian earth" from the Persian Gulf.

Though the art is now practised to such perfection in this country, the Indian patterns still retain their own particular beauties, and command a crowd of admirers. This is no doubt due in a great measure to the knowledge which they have of the effects of colours, and the proportion which they preserve between the ground and the pattern, by which a good effect is procured both at a distance and on a near inspection.

Printing in gold and in silver is a branch of the art which has been carried to great perfection in India, judging by the several specimens sent from very different parts

of India, as well upon thick calico as upon fine muslin. The size which is used I have not found mentioned, but in the Burmese territory the juice of a plant is used, which, no doubt, contains caoutchouc in a state of solution.

Leather is another chemical art with which the Hindoos have long been acquainted, though it is doubtful whether they ever made leather of very superior quality; but the art is practised in native states where it is not likely to have been introduced by European influence, as, for instance, in Cashmere and in Cutch, whence we have had skins dyed of different colours. But leather of very excellent quality has been sent from the Government farm at Hoonsoor in Mysore, likewise from Calcutta by the Messrs. Teil. The native shields are, however, not to be surpassed.

Soap seems to have been introduced by the Mahomedans, though the Hindoos have long used alkaline leys, obtained from the ashes of plants, for many of the purposes of soap; and they have a substitute for soap in several berries. Soap is made at Dacca, of shell lime, 10 mds.; sajie muttee, 16 mds.; common salt, 15 mds.; sesamum oil, 12 mds.; goats' suet, 15 seers. It is made of good quality at Saharunpore; and some marine soap, of excellent quality, though in small quantity, was sent from Calicut.

Candles may be appropriately mentioned here, though the mode of making them is probably not Indian, but taught by Europeans. The natives use oil lamps, of various shapes, often of metal fixed on an iron spike, which they stick into the ground. But excellent candles

are now made in India; as, for instance, the wax candles from Patna, and the stearic candles of the Messrs. Sainte from Calcutta.

Lacquer Ware.—The word *lacquer* is evidently derived from the Indian name *lac* or *look*, which is the resin secreted together with lac-dye by the lac insect, a species of *coccus*. The name occurs in Avicenna, who mentions it, as described by some, as the gum of a tree like the myrtle, and by others that it is a substance like to, and having some of the properties of amber. It is mentioned in many Indian works, and is apparently alluded to by Ctesias. This substance is used for a variety of purposes in India, and it is the common material for uniting things together, as gum and glue are in Europe. (Toys of various kinds, lac chains gilt, and lac grindstones, were shown.)

The term *lacquer* is applied to laying on or covering with a preparation of lac; but two different processes are usually confounded under this term. The one prevailing in Burma and the southern parts of the Indian Peninsula was well known to Dampier, in 1638, as he says, "The lac of Tonquin is a sort of gummy juice which drains out of the bodies or limbs of trees," and that "the articles lackered are cabinets, desks, &c." Some chemical change, no doubt, takes place on exposure of these juices to the air.

This kind of lacquered ware was much appreciated in the last century, and was imported chiefly from China; much, however, was always prepared in Burma, though that of Japan was always considered superior to any other, and of which many fine specimens may still be seen in

large folding screens, &c. Both these and the lacquer of Burma are prepared only from the juice of a family of plants (the *Terebinthaceæ*), the same as that to which the marking nut and sumach belong.

The chief expense of the manufacture arises from the care with which successive layers of varnish must be laid on. Various specimens of boxes have been sent from Moulmein and from Singapore, some showing different stages of the process.

Another kind of lacquer-work is rather of the nature of papier-mâché, covered with one or more layers of lac varnish. This is the case with the lacquered boxes from Cashmere and Lahore, so remarkable for the beauty and elegance of their patterns.

Sealing-Wax is also made from lac, and several varieties have been sent from different parts of India. Garcias ab Orto described it as made from lac in the year 1563. Tavernier mentions the same fact. The Spaniards have obtained credit for the invention; but they, no doubt, learned it from the Arabs. A Frenchman who travelled much in Persia and different parts of the East Indies is also thought to have been the discoverer; and by Beckmann it is considered to be a German invention. This is hardly a chemical art, but it is probably better placed here than elsewhere.

Paper.—The art of making paper is considered to be a Chinese invention, but it has long been known in India, where paper is made both of cotton and of the substitutes for hemp and flax. In the Himalayas it is made of the inner bark of *Daphne cannabina*, and in sheets of immense

size. A large collection was exhibited from different parts of India, but, though well adapted for writing on in India, it is not suited for Europe, in consequence of the difference in the ink used.

II. Textile Arts.

The East has, from the earliest times of which we have any record, been famous for its textile fabrics; and India, notwithstanding the great mechanical inventions of this country, is still able to produce her "webs of woven air," which a Manchester manufacturer of the last century attempted to depreciate, by calling them "the shadow of a commodity," at the same time that his townsmen were doing all they could to imitate the reality, and which they have not yet been able to excel.

Cotton Manufacture.—Though the invention and completion of a loom for weaving would indicate a high degree of ingenuity as well as a considerable advance in some other arts, the Hindoos were acquainted with it at a very early period, for in the hymns of the Rig Veda, composed at least 1200 years B.C., "weavers' threads" are alluded to, and in the Institutes of Manu it is directed,—"Let a weaver who has received ten palas of cotton-thread give them back, increased to eleven by the rice-water and the like used in weaving." That cotton was employed at very early periods is also evident from the Indian name for cotton, *karpas,* occurring in the Book of Esther, ch. i. v. 6, in the account of the hangings in the court of the Persian palace at Shushan, on the occasion of the great feast given by Ahasuerus, where "were white,

green, and blue hangings." The word corresponding to *green* is *karpas* in the Hebrew. It seems to mean cotton-cloth made into curtains, which were striped white and blue. Such may be seen throughout India in the present day, in the form of what are called *purdahs*.* [The mode in which these are used, and the employment of the same colours in stripes, was shown in *sutrunjees*, or cotton carpets on the wall.]

That the Hindoos were in the habit of spinning threads of different materials appears from another part of the Institutes of the same lawgiver, where it is directed that the sacrificial threads of a Brahmin must be made of cotton, that of a Shatriya (second caste), of *sana* (*Crotolaria juncea*), and that of a Vaisya, of woollen thread. The natives of India prepare fabrics not only of cotton, but also of hemp, and of *jute*, and other substitutes for flax; also of a variety of silks, and of the wool of the sheep, goat, and camel, as well as mixed fabrics of different kinds. But it is for the delicacy of the muslins, especially of those woven at Dacca, that India has so long been famous. It is pleasing to find that these manufactures still continue pre-eminent for fineness combined with softness. From a careful examination of the cottons grown in different parts of India, as well as of those of other parts of the world, we find that it is not owing to any excellence in the raw material that the superiority in the manufacture is due, for spinners here say that the Indian cotton is unfit for their purposes, being not only

* *Vide* "Essay on Antiquity of Hindoo Medicine," p. 145.

short but coarse in staple.* It is owing, therefore, to the infinite care bestowed by the native spinners and weavers on every part of their work, that the beauty of the fabric is due; aided, as they are, by that matchless delicacy of touch for which the Hindoos have long been famous. But this is no small advantage, for, according to one of their authors, "the first, the best, and most perfect of instruments is the human hand."

The Hindoo weaver is often described as hanging his loom to a tree, and sitting with his feet in the ground. If he did so, his productions would appear more wonderful than they are, as being still more the result of means unsuited to the ends. But a late resident of Dacca has given a minute account of the cotton manufacture of that district, and thence we learn positively, what might as certainly have been inferred, that great care is bestowed on every part of the process. The spinning-wheel is usually considered to be an improvement upon the distaff and spindle, as our machinery is upon the inexpensive spinning-wheel. In facilitating work and diminishing expense, the spinning-wheel was, no doubt, a great improvement, and is still employed throughout India for the ordinary and coarser fabrics. But the spindle still holds its place in the hands of the Hindoo woman when employed in spinning thread for the fine and delicate muslins, to which the

* Experiments were made for a series of years, at the expense of the Indian Government, to grow American cotton in the Dacca district, but without success, owing, it was thought by the American planter in charge, to excess of moisture, and to the depredations of insects.—Royle "On the Culture and Commerce of Cotton in India and elsewhere," pp. 241–256. 1851.

names of "Dew of Night," "Running Water," &c., are applied by the natives, and which, no doubt, formed the *Tela ventosa* of the ancients; and those called *Gangitika* in the time of Arrian were probably produced in the same locality. Mr. James Taylor, late of the medical service of Bengal, in a report which was sent by the Court of Directors to India, gave much interesting information respecting the cotton manufacture of Dacca; and to the Exhibition he sent a series of views of the different parts of the process, together with the instruments used in spinning, as well as some specimens of their fine thread. He shows that the Hindoo woman first cards her cotton with the jaw-bone of the *boalee* fish, which is a species of *Silurus;* she then separates the seeds by means of a small iron roller, worked backwards and forwards upon a flat board. An equally small bow is used for bringing it to the state of a downy fleece, which is made up into small rolls to be held in the hand during the process of spinning. The apparatus required for this consists of a delicate iron spindle, having a small ball of clay attached to it, in order to give it sufficient weight in turning, and imbedded in a little clay there is a piece of hard shell, on which the spindle turns with the least degree of friction. Besides these, a moist air and a temperature of 80° is found best suited to this fine spinning, and it is therefore practised early in the mornings and in the evenings, sometimes over a shallow vessel of water, the evaporation from which imparting the necessary degree of moisture. The spinners of yarn for the Chundeyree muslins in the dry climate of north-west India are described as working in underground

workshops, on account of the greater uniformity in the moisture of the atmosphere.

The Indian spinning-wheel is looked upon with contempt by those who look to the polish rather than to the fitness of a tool. Professor Cowper, than whom no one is a better judge, observing that the wood-work of some of these spinning-wheels was richly carved, inferred that the strings with which the circumference was formed might have some use, and not be adopted from poverty or from idleness. In making working models of these instruments, he has found that in no other way could he produce such satisfactory results as by closely imitating the models before him, the strings giving both tension and elasticity to the instrument. The spindles, moreover, being slightly bent, or the hand held obliquely, the yarn at every turn of the spindle slips off the end and becomes twisted.

As the different processes are fully described in the work to which I have alluded, I need not dwell further on this part of the subject, except to mention that the common dimensions of a piece of Dacca muslin are twenty yards in length by one in breadth. There are more threads in the warp than in the woof, the latter being to the former, in a piece of muslin weighing twenty tolas or siccas, in the proportion of 9 to 11. One end of the warp is generally fringed, sometimes both. The value of a piece of plain muslin is estimated by its length and the number of threads in the warp, compared with its weight. The greater the length and number of threads and the less the weight of the piece, the higher is its price. It is

seldom, however, that a web is formed entirely of the finest thread which it is possible to spin. The local committee of Dacca having given notice that they would award prizes for the best piece of muslin which could be woven in time for the Exhibition, the prize of 25 rupees was awarded to Hubeecoolla, weaver of Golokonda, near Dacca. The piece is ten yards long and one wide, weighs only 3 oz. 2 dwts. and may be passed through a very small ring.

Though the cotton manufactures of India have so greatly fallen off, from the cheapness of English manufactured goods, it is gratifying, as well as unexpected, to learn from Mr. Taylor, that as the finest muslins formed but a small portion of the goods formerly exported to England, the decay of the Dacca trade has had comparatively little influence on this manufacture, as these delicate manufactures still maintain their celebrity in the country, and are still considered worthy of being included among the most acceptable gifts that can be offered to her native princes; and he believes that the muslin made at present is superior to the manufacture of 1790, and fully equal to that of the reign of Aurungzebe. He also informs us that a College for the education of the natives stands on the site of the former English factory.

Fine muslins have been sent to the Exhibition, not only from Dacca, but also from Kishenigurh, in Bengal; likewise from as far south as Cottar, in the Rajah of Travancore's dominions; as well as from Chundeyree in the Gwalior territories.

Specimens of almost every variety of the cotton manu-

facture, such as the coarse garrhas and guzzees for packing, clothing, and for covering corpses, with dosootees, &c., for tents, canvass for sails, towels, and table-cloths, and every variety of calico, have been sent from the islands of the Indian Ocean, from Nepal and Assam, as well as from all along the valley of the Ganges, from Bengal up to the Jullundur Doab, in the Sikh territories; also from Cutch, Ahmedabad, Surat, and Dharwar, on the western side of India; and from the central territories of the Nizam, and of the Rajah of Nagpore.

The finest pieces of calico, and punjum longcloth, have been sent from Jugginpettah, in the Northern Circars, which was formerly the great seat of this manufacture.

It is curious that some of these places, noted even for their manufactures, did not grow their own cotton. Dacca, no doubt, grew most of what it required for its muslins, because the thread did not swell in bleaching, but it also imported cotton formerly from Surat, as well as from Central India. Azimgurh imports its cotton chiefly from the same source to which the Northern Circars was also formerly indebted, while Chundeyree imports its cotton from the distant valley of Nimur.

Among the fabrics there are a great variety, which prove that the natives are acquainted with every kind of weaving, from guzzees and gauzes, to striped, chequered, and flowered muslins. The last are interesting as specimens of an art which has been long known in the East, and the mode of making which has often puzzled weavers in this country. In manufacturing figured (*jamdanee*) fabrics, Mr. Taylor informs us, "They place the pattern,

drawn upon paper, below the warp, and range along the track of the woof a number of cut threads, equal to the flowers, or parts of the design intended to be made; and then, with two small fine-pointed bamboo sticks, they draw each of these threads between as many threads of the warp as may be equal to the width of the figure which is to be formed. When all the threads have been brought between the warp, they are drawn close by a stroke of the ley. The shuttle is then passed by one of the weavers through the shed, and the weft having been driven home, it is returned by the other weaver." Most of these flowered muslins are uniform in colour, but some are in two colours, and chiefly woven in Bengal. Specimens of double-weaving in cotton, and showing considerable skill, with a pleasing arrangement of pattern and colours, have been sent from Khyrpore, in Sindh. These are also woven in Ganjam.

Flax, hemp, and substitutes for them, are all well known and extensively cultivated in every part of India; but flax solely on account of its seeds, which yield oil and oilcake, though some very good flax has been produced in some parts of Bengal; and the hemp, on account of the intoxicating principles secreted in its leaves and green parts, and which in different forms is known under the name of *bhang, husheesh, churus*. The fibre of the plant, as grown in the plains, is too dry and brittle to be useful either for rope-making or for textile fabrics, though in the Himalayas some excellent ropes and canvass are made, and the culture might be greatly extended if there was a demand for the produce. Species of crotolaria, of hibiscus,

of corchorus, and of many other genera, yield fibres which are used for rope-making; but that of the species of corchorus, commonly called *jute,* for making *gunny* bags, used for packing, which are even exported to America for packing their cotton. In the Peninsula these bags are made of *Crotolaria juncea,* or *goni* plant. The rhea fibre, which is closely allied to, if not identical with, the China grass, is used for making fishing-lines and some kinds of fabric, but its employment may be greatly extended. So also the plantain, the pine-apple, and the sanseviera fibre, of all of which some fabrics have been made and exhibited, but in too small quantities to attract much attention, though some will probably become important articles of commerce.

Silks.—Silk is a production of China, and said by Chinese authors to have been known there for thousands of years. It has long been imported into India from China. The earliest notice, though there is some doubt about the passage, is in the Mahabharut, where Cheenas, Hoonas, &c. are said to have brought "silk and silk-worms" as presents to Yoodhistira. When the China silk-worm was first introduced into India as an object of culture we have no information; but what is called the indigenous (*desee*) silk-worm is carefully distinguished from the China worm; and there are several species of wild silk-worms, species of *Saturnia, Phalæna,* and *Bombyx,* all of which were shown at the Exhibition, with *Tussur, Moonga,* and *Eri* cloth. The former is much used in India by the natives, and is best known as an article of commerce, and has been used here for

parasols; in India it is esteemed for children's dresses. The Eri cloth is extensively used as an article of clothing by the inhabitants of Assam.

The silk of Bengal was originally very inferior in quality, and very carelessly wound. The East India Company, in the year 1757, sent a Mr. Wilder to improve the winding of silk; and in the year 1769 other Europeans, as drawers, winders, reelers, and mechanics. The filatures were all in Bengal, and to the southward of 26° of N. lat., for the north-west provinces are much too hot and dry for the silk-worm. Experiments were for many years made on the western side of India to introduce the culture of the silk-worm, under an Italian, M. Mutti; but they have lately been abandoned from want of success. Some excellent silk is being produced in Mysore, and it is probable that the culture might easily be carried on in the valleys of the Himalaya.

Of the manufactured silk some fine specimens were sent from Messrs. Vardon, as well as by Mr. Jardine. Moorshedabad has long been a central mart for silk goods, and a variety of specimens of silk have been sent from thence, and some satins (*mushroo*) from Benares, Cutch, and Hyderabad, chiefly in alternate stripes of different colours.

On the Bombay side the culture did not succeed, and the raw material is imported from China and dyed, but the manufacture has not on that account been neglected. The weavers seem, in fact, to have paid an extra degree of attention to their art, and sent silk, which is well woven, and in a variety of patterns, together with an excellent specimen (called *pytanee*) of double weaving, being red on

one side and green on the other, and showing the colours and patterns very distinct. This is from Poona. The silks from Surat, Tanna, and Ahmednugger, are also to be admired for their patterns, as well as the longees from Sindh. The silks from Cashmere have attracted much attention, both from the substantial nature of the fabric, some of which is, I believe, called tafeta, and for the moderated tone of the colours with which they are dyed.

The flowered silks, or brocades, from Benares and from Ahmedabad, as well as those from Hyderabad, command notice for their richness and the happy disposition of pattern and combination of colours.

Woollens.—As the skin of the sheep was probably one of the earliest substances employed for covering the body, so its wool, having the property of felting, must early have led to the discovery of one kind of cloth, while the length of its staple and the facility with which it can be twisted into a thread, would lead to the formation of woollen yarn, which we have seen was early employed by the Hindoos as the sacrificial thread of the lower caste.

Several specimens of wool have been sent; some fine merino wool from the table-land of Mysore, and indigenous wools from the hilly country of the north-west frontier. Some from Lahore, and other kinds from the dry and cold elevated climate of Tibet. Of the last, some very fine specimens from Lieut. Strachey. Many of the animals there being furnished with a fine down or hair-like wool under the coarse common outer wool. It is this which is chiefly employed for the shawls and the shawl-wool cloth.

Though woollen fabrics of superior quality are not likely to be sent from a hot country like India, yet as there are great diversities of climate in its different parts, we have some very substantial woollen cloths and blankets from different parts, as well as some fine shawl-wool cloth from Cashmere; also the kind called Puttoo; a new fabric, named *Pureepuz*, the pile of which, on one side, is formed of loops. Felted blankets and cloaks have been sent from the table-land of Mysore, as well as from the north-west frontier, and from Nepal and Tibet.

Shawls might fitly be treated of in this place, but they are too well known for their useful qualities, and too much admired for the elegance of their patterns, to allow me to treat of them, unless there was some new information to communicate. This I do not possess. A short report on them is published in the "Illustrated Catalogue," but a detailed account of the manufacture in Cashmere, and of the drawing of the patterns, as well as of their ideas on the juxtaposition of colours, would form a very interesting subject for an essay.

Among the references to silk in ancient authors, there is also frequently mention made of gold and silver as interwoven with silk; even the Coan women are represented as interweaving gold thread in their silken webs, and Caligula as wearing "a tunic interwoven with gold." Babylonicum was the name applied to the splendid productions of the Babylonian looms. These are described as being adorned both with gold and with variously coloured figures. A peacock's train is compared to a figured Babylonicum, enriched with gold; while Peplum, the shawl, had the

greatest skill and labour bestowed on its fabrication, and various objects were frequently represented on it: that worn by the Pastophori in religious ceremonies was richly interwoven with gold, and displayed various symbolical and mythological figures; while the Paragauda, a word supposed to be of Oriental origin, we learn was the border of a tunic enriched with gold thread and worn by ladies. There is no doubt that it has long been the custom so to adorn garments in the East, and we have had numerous such specimens sent to the Exhibition.

The above enumeration of the various kinds of ancient shawls, for which we are indebted to the labours of Mr. Yates, would nearly answer as an account of the series of shawls, scarves, and bordered vests and tunics, interwoven with gold and silver thread, enriched with jewels, or with their imitation, and adorned in some cases with representations of animals, which we had sent to the Exhibition from different parts of India, as from Gwalior, Nagpore, and Hyderabad, together with the brocades of Benares and Ahmedabad, and of which we have specimens now before us. But, even in these gorgeous productions, there is the same attention to harmony of effect combined with variety and elegance of pattern that we have observed in the simplest cottons and the richest silks.

Carpets.—Climate chiefly influences everything referring to the clothing or habitation of man. Among the latter, coverings for the floor are necessarily included. In a cold, wet climate, it is hardly possible to use the floors of rooms without some kind of covering; and therefore we

read in earlier times of the floors being covered with straw, rushes, hay, or heather.

In warm countries, on the contrary, the habit is more to sit in the open air under the shade of trees; and it is desirable to have some covering over the sandy or dusty earth, either to sit or lie down upon. It is not surprising, therefore, that the invention of carpets should have originated in Eastern countries. Skins were probably first employed. A piece of leather has been sent as that so used by a Burmese priest.

Mats are the most agreeable in hot weather; and for these India is famous, as well for their variety as for their fineness and pattern. Carpets, either of cotton, silk, or woollen, are employed in all Eastern countries, from the south of India to Turkey in Europe, for praying on, or for occasions of state.

The carpets employed by the ancients are thought to have been of the nature of tapestry, and used for covering couches rather than floors. True, carpets seem to have been first employed in Persia; and those called Turkish were probably originally of Persian manufacture, whence the manufacture might have been introduced into Turkey, and where it is still practised, as we had so many rugs sent from thence, as well as from Egypt, being used there as prayer-carpets by Mahomedans.

The Persians still remain unrivalled in the happy combination of colour and pattern for which their carpets have long been distinguished, whence the most varied hues and deepest tints are brought into close approximation, and, far

from offending the eye, please by their striking, because harmonious contrasts.

Though printed calicos of large size and suitable patterns are sometimes used for covering the floor in India, and we had some fine specimens from Ahmedabad and from Mooltan, yet the most common carpets employed in India are those made of cotton, and called *sutrunjees*, of different colours, usually blue and white, in red or orange stripes, squares, or stars; some of large size, and well suited for halls and tents. They are thick and strong in texture, the two surfaces alike, smooth and without pile. They are manufactured in different parts of India, and good specimens were sent from Moorshedabad and Rungpore, some good coloured kinds from Agra, and a fine large one, woven in one piece, from Ahmedabad.

Another kind of cotton carpet is that with a pile of cotton, and similar in appearance to a Turkey carpet. Two good specimens were sent from Sasseram,—white, with a centre and border of blue. Others, with every variety of coloured pattern, from Hyderabad, &c.

Silk is another material of which carpets are made in the East; and the pile being of silk, imparts both softness and richness to the surface, while the colours are clear and brilliant. A few very splendid specimens of such carpets were exhibited, especially the large one which was hung up to the eastward of the tent, and was contributed by Maharajah Goolab Sing. It was as beautiful a specimen of variety in the pattern, brilliancy in the colouring, as well as of pleasing harmony in the whole, as any in the Exhibition building. A smaller one, of the same pattern,

was laid within the tent, together with another, in the same style, from Mooltan. Other silk carpets, but of small size, were sent from Tanjore, Hyderabad, and Khyrpore. Woollen carpets, of large size, and of beautiful and well-coloured Oriental patterns, were sent from Mirzapore and from Goruckpore. The former is most famous in India for its carpets, and which are, I believe, frequently sold in this country as Turkey carpets. A large carpet was also exhibited from Bangalore; but the manufacturer having ambitiously attempted a European pattern, the effect was generally pronounced unfavourable to the desertion of the much-admired Indian style. The rugs from Ellore, on the contrary, were universally admired for their general characteristics of Oriental pattern and colouring; and these, as well as the large carpets from Mirzapore, &c., which were all in the same style, seem well adapted for sale in Europe.

Two carpets are worthy of notice, as having been made, the one by the convicts in the gaol of Cawnpore, and the other by the reformed Thugs in the Government School of Industry. This was made to fit the large tent which was pitched outside the building, and which did not attract so much attention as it ought to have done, though it showed the capability of the reformed Thugs and their families of making tents in the best style.

Though we are without all the requisite details, we may yet form a good idea of the manufacture from the model of the carpet-loom, with an illustrative drawing from Hoonsor. In this we see five weavers seated before the perpendicular loom, with a foreman seated with book

in hand, apparently giving directions to the weavers of what they were to do.

III. Manual and Mechanical Arts.

Lace-making.—Lace is a term unluckily applied to two very distinct arts, one consisting of gold and silver wire, or even silk thread, woven into ribands for embroidering hats and uniforms. The other is the well-known transparent network, in which the threads of the weft are twisted round those of the warp; it may be made of silk, flax, or cotton, or even of gold and silver thread, and has usually a pattern worked upon it, either during the process of making the lace, or with a needle after this has been completed. Though much lace is now made by machinery, the highly-esteemed genuine article is made by hand; and, therefore, may fitly commence the series of arts which depend chiefly on manual dexterity. Lace-knitting is considered to be a German invention; but lace worked by the needle is of far older date, and was probably an Eastern invention, though it does not appear to have been known or practised in India. Lace, however, is enumerated by Gen. Cullen as being made in the territories of the Rajah of Travancore; and the Madras Central Committee, in their final report, state, that "the lace of Nagercoil, which, though knit by natives of the country, was declared equal to the best French lace.' A few of the European residents are already aware of the superior quality of the lace, and use it, but its beauty is well deserving of being more generally made known than it at present is." The lace, when seen at the Exhibition, was much admired, and some

said that it must have been made in France. But the doubt may easily be resolved, and advantage would result to all parties, by giving orders for some of this lace to the native workers in Travancore. Samples of six different kinds were sent. Gold and silver blond lace are both excellent of their kinds, but as the demand is limited, and fashion changeable, they might not always command a sale. But the broad black lace on wire-ground, and the broad white and fine lace on Brussels ground, and of the nature of Bedfordshire lace, are highly approved of by the best authorities. The broad being thought worth four shillings, and the narrow worth two shillings a-yard.

Knitting appears to be unknown to the natives of India, though it is well worthy of being taught them; as, indeed, it has been in the few girls' schools which the natives have allowed to be established.

Net-making, or the art in which the fabric is required to be transparent, but in which the fibres are decussated and retained in their places by knots, that the interstices may retain their form and size, and prevent objects from escaping, seems to have been known in the earliest ages in Egypt, and is practised with the greatest skill on the coasts of Bombay and of Scinde, as well as on the rivers of India. A great variety of nets, from a few to fifty fathoms in length, are fully described in the "Illustrated Catalogue." Those from Singapore are interesting, as some are made with cotton, and others with the fibre which is very similar to, if not identical with, that forming the so-called China grass.

Needle-work.—Though the manufacture of needles is

said to have been first introduced into England, in the year 1540, by a native of India, and afterwards by a German, the needle itself is not much used by the Hindoo inhabitants of that country. This seems unaccountable in so anciently civilized a country, as the needle would seem to be required for making clothes for even the poorest of its inhabitants. But the Hindoos, both male and female, have the art of completely, and yet elegantly, enveloping the person in long pieces of cloth (their *sarees* and *doputtas*) just as they come from the hands of the weaver. [The figure of a woman cleaning cotton was here pointed out.] The needle applied to sewing is, however, essential to make the dresses of the Mahomedans; and without supposing that the needle was quite unknown, as "sewers of cloth" are mentioned by Manu, and it was well known in China, it is to the Mahomedans chiefly, or to other Northern invaders of India, that the introduction of the needle and its uses, as well as the art of embroidery, are due. The Arabs, probably, introduced the manufacture of needles into Spain; as Spanish needles were at one time famous. They are manufactured in India from fine wire. [A small box, with fine needles, in different stages of manufacture, was here shown from the north-west of India.]

The art of *Sewing* is now practised in India chiefly by men, who are Mahomedans. They form the class of tailors (*durzees*), who make the dresses of their Mahomedan brethren. One is usually kept in the service of most Europeans.

"*Darning* (*rafu-gari*) is a branch of the art which,

though in Europe applied to the most homely purposes, requires the greatest skill in the East, where a defect in a costly shawl is to be made good, or a coarse thread is to be picked out of a piece of muslin into which it has been accidentally introduced. So skilful are some of these *rafugars*, that they can extract a thread twenty yards long from a piece of the finest muslin, and replace it with one of the finest quality. They are principally employed in repairing the muslins and calicoes that are injured during bleaching, in removing knots and joining broken threads; also in forming the gold and silver headings on cloths."—TAYLOR.

Embroidery.—The art of embroidery was known to, and practised with great skill in ancient times in Egypt, Assyria, and Persia. The Israelites learnt the art before their exodus, the Babylonians were famed for their rich tapestries, and the Assyrian monuments display richly embroidered robes and trappings. Many parts of India are famous for this art (*Zur-do-zi*). "From Dacca," says the Abbé de Guyon, in 1744, as quoted by Mr. Taylor, "come the finest and best Indian embroideries in gold, silver, or silk; and those embroidered neckcloths and fine muslins which are seen in France." There has always been a demand for such scarves for the markets of Bassora and Java. In the present day we have silks and woollens, muslins and nets, Cashmere shawls, European velvets embroidered with silk or *tussur*, that is, wild silk of either floss or common twisted silk thread: or with gold and silver thread and wire in great variety. Mr. Taylor describes the cloth to be embroidered as stretched out on

a horizontal bamboo frame, raised about a couple of feet from the ground, and the figures intended to be worked or embroidered are drawn upon it by designers, who are generally Hindoo painters. On woollen cloths the outlines are traced with chalk, and on muslin with pencil, and the body of the design copied from coloured drawings. The embroiderers, seated upon the floor around the frame, ply the needle by pushing it from, instead of towards, them. In place of scissors they commonly use a piece of glass or China ware to cut the thread.

Among the embroidered articles those from Dacca and from Delhi are probably the best known. In the latter, small shawls and scarves are chiefly embroidered both with floss and twisted silk; in the former, both nets and muslins, with floss silk of various colours. But Dacca is also famous for its embroidery of muslins with cotton, which is called *chikankari* or *chikan-dozee*, and of which specimens of different articles of clothing have been sent from Calcutta; also an infant's robe of grass-cloth, worked at Serampore, and a scarf and handkerchief, pine-apple fibre from Madras. One kind is "formed by breaking down the texture of the cloth with the needle, and converting it into open meshes." Mr. Taylor states that *Kashida* is the name given to cloths embroidered with *muga* silk or coloured cotton thread; and though generally of a coarse description, gives occupation to a number of the Mahomedan females of Dacca. Though the scarves of both Delhi and of Dacca are much admired, it has been suggested to me by a lady, that muslins or nets, worked so as to be suitable for making ball-dresses, would probably be in great

demand, as those which are now sold here for such purposes are very inferior in taste and elegance to the Indian embroidery. The beetle-wing embroidery from Madras was particularly elegant: and the velvet awnings, musnud covers, hookah carpets, and elephant trappings, embroidered with gold and silver, chiefly at Moorshedabad and Benares, were admired as well for richness as for the skill with which the ground-work was allowed to relieve the ornaments. The embroidered saddles and saddle-cloths, and floor-coverings from Pattiala, Mooltan, and Lahore, were of the usual style of what are called the works of that famed valley, and which was conspicuously shown in the dresses, caps, and slippers from Cashmere itself. But that the skill and taste are not confined to one part of India was also to be seen in the table-covers from Tatta in Scinde, and in the embroidered boots from Khyrpoor, which have been immortalized by Mr. Digby Wyatt.

Though not coming exactly under the head of embroidery, we may yet mention here, on account of a similar effect being produced, the saddle-cloths and matchlock accoutrements from the Rajah of Kotah, where a pattern is produced with gold-headed nails, which are fixed into green velvet. The effect of this was so good as to be greatly admired by some of the best judges, and among others by our Chairman.*

Jewellery.—Workers in iron and steel could never have found difficulty in managing gold and silver, for which indeed the East has always been famous. Working

* The chair was on this occasion occupied by Mr. Owen Jones.

in gold was familiar to the Egyptians before the exodus of the Israelites. Some gold has always been washed out of the sand in India. Small quantities have been sent to the Exhibition from different parts of the country, and the gold-washer's apparatus from Rohilcund. That the Hindoos have long been familiar with its applications we find in the hymns of Rig Veda, where golden armour and golden chariots, and decorations of gold and jewels, are frequently mentioned. The variety of ornaments and of arms which have been displayed, show their skill in working it up. Mr. Hamilton sent from India a series of specimens of gold and silver in different stages, to show the process of making gold wire. The rose chain from Trichinopoly, and the snake chains sent by the Rajah of Vizianagrum, all display great skill in the workmen, as also the silver filagree work from Hyderabad, for which Cuttack and Dacca are most famous, and display greater delicacy and beauty than either Genoa or Malta. Much of the jewellery being peculiar in form, and in the ways in which it is worn, was not so much admired in this country as the skill of the workman otherwise deserved. The articles usually made in filagree work are bracelets, earrings, brooches, and chains, groups of flowers, uttardans, and small boxes for native uses. Of all these beautiful specimens were sent. Mr. Taylor says, "The design best adapted for displaying the delicate work of filagree is that of a leaf; it should be drawn on stout paper, and of the exact size of the article intended to be made. The apparatus used in the art is exceedingly simple, consisting merely of a few small crucibles, a piece of bamboo for a

blow-pipe, small hammers for flattening the wire, and sets of forceps for intertwisting it."

The art of making gold wire, that is, silver covered with gold, as shown in the specimens sent by Mr. Hamilton, is practised in various parts of India, as Dacca and Hyderabad, as well as Delhi and Benares. "Several varieties of gold and silver thread (*badla*) are made at Dacca, as *goolabatoon* for the embroidery of muslins and silks; *goshoo* for caps and covering the handles of chouries; *sulmah* for turbans, slippers, and hookah-snakes; and *booiun* for gold lace and brocades." Much fringe of various patterns is made, and thin tinsel stamped into various forms of flowers, or impressed with excellent imitations of jewels, such as flat diamonds, emeralds, and rubies.

It may, perhaps, have escaped notice that many of the ornaments which were exhibited were such as are made only for the poorer classes, for instance, imitations of precious stones, ornaments in pewter, in shell, and lac, and still simpler, a bracelet with straw to represent the gold, and the red seeds of *Abrus precatorius* in the place of garnets.

Carving.—The term Carving, as is well known, is, in the present day, applied to the cutting into particular shapes and patterns different materials, such as wood, horn, and ivory. Wood-carving the natives must have practised from very early times, probably for their idols, as well as for calico-printing, as they have long used wood-blocks for this purpose. They are fond of carving many of their ordinary utensils, as spinning-wheels, &c.; but

their skill was shown in the carving of the black wood furniture from Bombay, especially in the elegance of the patterns of the backs of the chairs, and sofas, in the side-boards and book-cases. So also in the ebony screens from Madras, carved by Moangapa Achong, a native carpenter of Madras, without any European assistance. Such furniture is well adapted for even the best English houses.

A variety of specimens of carving in ivory have been sent from different parts of India, and are much to be admired, whether for the size or the minuteness, for the elaborateness of detail or for the truth of representation. Among these the ivory-carvers of Berhampore are conspicuous. They have sent a little model of themselves at work, and using, as is the custom of India, only a few tools.

The set of chessmen carved from the drawings in Layard's "Nineveh," were excellent representations of what they could only have seen in the above work; showing that they are capable of doing new things when required; while their representations of the elephant and other animals, are so true to nature, that they may be considered the works of real artists, and should be mentioned rather under the head of Fine Arts than of mere manual dexterity.

The carvings in the same material in the state chair from Travancore were greatly admired, and from the truth of representation on a minute scale, where an elephant is enclosed in the shell of a pea, from Calicut; also in the beautiful specimens of minute carving sent by his Highness the Nizam of Hyderabad. The chouries,

or fly-flappers, where the ivory, or sandal-wood, is cut into long hair-like threads, are also specimens of their mechanical skill; while their skill in wood-carving was conspicuously displayed in the elaborate details of the sandal-wood boxes from the Malabar coast, and also in the Musjid exhibited by Mr. Mansfield from Ahmedabad, and in the Hindoo temples from Cutch, also in the box, made of an African wood, from the Rao of Cutch.

But the skill of the Indian carver is conspicuously shown in the beauty, both of the figures of the Rajah and Ranee of Travancore, and of the buildings, in so soft and yielding a material as pith, or, rather, in the pith-like stems of the marsh-plant called shola (*Æschynomene aspera*). In the latter all the elaborate detail of the richly ornamented Hindoo architecture of the South of India is carefully brought out. For this work only two tools seem to be employed,—one a large and heavy knife, the other with a fine sharp cutting edge.

Besides these, we have cocoa-nut shells and gourds, carved and made into cups, vases, and snuff-boxes; also the kernel of the cocoa-nut variously cut, for making garlands for state occasions.

In connexion with these carved works might be mentioned a number of *other manufactures*, in which the natives display great skill and neatness, as well as their habitual taste; for instance, in their work (and other) boxes of ivory, horn, or porcupine quill, ebony and sandal-wood, their fans and umbrellas, chouries, and khuskhus or other baskets, hookah-snakes, imitation fruits and flowers, toys and puzzles.

Among these I ought not to omit mentioning the skill with which the unyielding substance of a hard thick shell is converted into necklaces for the men and into bracelets for the women.* The tools as well as the shells in different stages of manufacture, having been sent by Dr. Wise and by Mr. Mytton, we can see the different steps of the process, and how skilfully means are adapted to ends.

In connexion with the shell-workers of Dacca, I ought to notice the works in horn from Vizagapatam, in the Northern Circars, as well as from Viziadroog in the Concan, in which the excellent polish of all, the transparency of some, and the elegant forms of others of the articles, show that the difficulties of the manufacture have been overcome in this, as in so many other substances, especially in the articles prepared by a carpenter of Viziadroog.

Working in Stone.—Working in stone, polishing the hardest surfaces, engraving its surface with imperishable records, and sculpturing it into various forms, even excavating gigantic temples out of the solid rock, are all departments of sculpture and engraving to which the Hindoos have paid attention from the earliest times; and their buildings are conspicuous for a quality for which those of Egypt have often been admired; that is, the

* "The manufacture of shell bracelets is one of the indigenous arts of Bengal, in which the caste of Sankari at Dacca excel. The *chanks* of which they are made are large concave shells (*voluta gravis*, Linn.), from six to seven inches long, and of a pure white colour. They are imported into Calcutta from Ramnad and South India, opposite to Ceylon, and from the Maldive Islands."—TAYLOR.

exquisite polish and glass-like appearance of some of the hardest granite. Dr. Kennedy has fortunately given us an account of the process by which they effect this. "The tools," he says, "which the Hindoos use, are a small steel chisel and an iron mallet. The chisel, in length, is not more than about twice the breadth of the hand of the Hindoo workman; which, as is well known, is very small; and it tapers to a round point like a drawing-pencil. The mallet also is iron, a little larger than the chisel, but not weighing more than a few pounds. It has a head fixed on at right angles to the handle, with only one striking face, which is formed into a tolerably deep hollow, and *lined with lead.* With such simple instruments they formed, fashioned, and scooped the granite rock which forms the tremendous fortress of Dowlatabad, and excavated the wonderful caverns of Ellora; for it seems by no means probable that the Hindoo stone-cutters ever worked with any other tools." Dr. Kennedy adds, "The traces of the pointed chisel are still visible on the rocks of Dowlatabad, as they are also on some of the great works of Egypt."

The stone having been brought to a smooth surface, it is next dressed with water in the usual way, and is then polished in the following manner:—

A block of granite, of considerable size, is rudely fashioned into the shape of the end of a large pestle. The lower face of this is hollowed out into a cavity, and this is filled with a mass composed of pounded corundum-stone, mixed with melted bees-wax. This block is moved by means of two sticks, or pieces of bamboo,

placed on each side of its neck, and bound together by cords, twisted and tightened by sticks. The weight of the whole is such as two workmen can easily manage. They seat themselves upon, or close to, the stone they are to polish, and by moving the block backwards and forwards between them, the polish is given by the friction of the mass of wax (and lac ?) and corundum.

Nearly the same materials, and with a still greater degree of success, are employed in polishing such delicate articles as beads and bracelets; elegantly shaped cups, or the models of cannon. Of the processes employed, a very interesting account, which is published in the "Illustrated Catalogue," is given by Mr. Summer of Cambay. The stones are first fixed on a steel spike, and there roughly rounded with an iron hammer, and then polished with a composition of lac and corundum variously applied. The holes are bored with a steel drill, tipped with a small diamond. Cups and saucers, and similar hollow articles, are wrought, according to the required external shape on the steel spike, and a rough polish given on the rough polishing stones. The cavity is formed by the diamond-tipped drill to the depth of one-fourth of an inch all over the space, until it exhibits an honeycombed appearance; the prominent places round the holes are then chipped away; and this process is repeated until the depth and form desired are obtained. They are then polished upon prepared moulds of convex forms, and of the same composition as the polishing-plates which are attached to the turning-wheel.

The materials which are thus worked upon are the

agates, crystals, and cornelians, as well as blood-stones, found in the neighbourhood of Cambay, and which some people fancied must have been sent out from Germany, but of which there is an abundant supply in India, both near Cambay, and in the Soane and Kane rivers far to the east of that locality.

The above relation is interesting, not only on its own account, but also as explaining how the beautiful agate, jade, and crystal cups, which were purchased at Lahore, and exhibited in the jewel-cases of the Indian collection, may have been made. It has been supposed, that the mode of making these jewelled cups is at present unknown. But as we know the details of the manufacture at Cambay, there seems no insurmountable difficulty in working out the agate and jade cups of Lahore; of which, though some are plain and polished, others have their surfaces elegantly carved, and not a few inlaid with precious stones, and all conspicuous for the beauty of their forms. Can these different vessels of crystal, agate, and jade, be the famed Eastern cups, of which some were called *vasæ murrhinæ?*

Those who can give a lustrous polish to granite, and appear to mould crystal cups into as elegant forms as the softest clay, can find no difficulty in carving sandstone or in cutting marble. But the elegance and variety of the patterns into which both sandstone and marble are cut, is conspicuous in the open lattice-work with which tombs are surrounded in north-west India. These are, moreover, remarkable for the light and aerial, almost lace-like appearance with which they impress the ob-

server at a little distance. Two good specimens of these screens in sandstone were sent from Mirzapore, and on a smaller scale from Boondee. The same elegant style of work, but of less elaborate patterns, was conspicuous in the splendid marble couches and chairs presented to Her Majesty by the Rajah of Nattore. The marble vases and vessels from the Rajah of Johdpore were also remarkable for elegance of form and fineness of polish; while the swans and fish, which though made of marble yet could swim on water, showed the attention paid to the buoyant effects of air when enclosed in so heavy a substance as stone. The stone-work from Gaya also displays the skill of the workmen; but here the turning-lathe has also been employed to give a finish to the external form of the vessels: but the dish with the fig-leaves carved on its upper surface is, for its thinness and the taste displayed in its design, an elegant specimen of carving in stone.

The *Turning-lathe*, which has just been mentioned as employed for giving a finish to the external forms of vessels of stone, is also employed by the natives for wood-work, as for making toys, &c. The latter are much esteemed in India, from the difficulty, if not impossibility, of children being able to remove the colour from their surface, in consequence of the covering of a varnish of lac. Some beautiful specimens of turning have been sent from Bombay, in the shape of vases and boxes; as well as of balls, a number of which are contained one within another. The patterns upon these various articles are to be admired, as well as their external forms. They were made at Hyderabad in Sindh.

IV.—Fine Arts.

The Fine Arts, as the term is generally understood, have not attained such a degree of excellence in India as to bear any favourable comparison with the state of the fine arts in Europe; yet there are some things under this head, and not beyond the limits of the Exhibition, which are not unworthy of notice.

Painting, being an imitative art, must, no doubt, have been practised in some form by all the nations of antiquity. We know that in Egypt hieroglyphics preceded the art of writing, and that the tombs display every variety of Egyptian painting. But the Hindoos seem never to have paid great attention to, or excelled in, this art; though they have shown their good sense in employing artists to design patterns for their textile fabrics, and even to draw them on the shawls and scarves which are to be embroidered.

The Hindoo painters are admirable delineators of objects of natural history; hence, most of the illustrated works which have been published on the Indian branches of this subject have usually been drawn by native artists, several of whom are constantly employed in the East Indian Company's Botanic Garden at Calcutta. They are usually faithful copyists, but are often objected to as being stiff in their style, and not paying sufficient attention to perspective; but this is hardly worse than the artistic palm-trees which one sees in European drawings, and which are very unlike those with which Nature adorns her own pictures.

The only paintings by the native artists which we

have had in the Exhibition are several series in talc, some from Trichinopoly, and the others from Delhi: the latter giving a representation of the different officers and dresses at the Mahomedan ceremony of the Mohurran, and of the different servants in the employ of Europeans; while the trades, as well as many agricultural operations, were represented in the drawings from the south.

The paintings are generally small, and, therefore, do not attract much attention. Some of those painted at Delhi on ivory are very beautiful, resemble enamels, and are frequently worn in brooches and bracelets.

Though the Indian paintings, as those mentioned, are usually small, there are some of considerable size and of great antiquity in the different rock-hewn temples of Western India. Great fears having been entertained that the whole might in course of time become destroyed, the Court of Directors some time since took measures to have copies of all of them made. Several of these from the caves of Ajunta have arrived, and are displayed in the library of the India House.

Sculpture.—Under the head of Sculpture many things are often included which are now usually considered to be distinct branches of the art: some consisting in the art of producing figures upon wood, gems, or metal; while the term Statuary is confined to the art of making statues or busts. In this the Indians have not attained any excellence; though the opportunities are great of seeing the human figure as well at the ordinary occupations of life as in their gymnastic schools, and they have had considerable employment in sculpturing the

figures, though grotesque, of their gods and goddesses. Yet that they are capable of excelling in this, as in many other arts, is evident from the admirable representations of the different castes and trades in the clay figures from Kishengurh in Bengal, as from Gokak, near Belgaum; so also in the ivory carvings of the elephant, camel, &c., from Berhampore, and in the stone sculptures of the rhinoceros, sacred bull, &c., from Gyah. That in former times they attempted greater things, and with considerable success in ancient times, may be seen in the ruins of the city of Mahamalaipoor to the south of Madras. Bishop Heber describes the rocks as carved out into porticoes, temples, bas-reliefs, &c., on a much smaller scale indeed than Elephanta or Kennary, but some of them very beautifully executed; and the bas-reliefs of a pagoda at Perwuttum are considered as some of the most extraordinary specimens of art in all India. So in the cave temples of Elephanta, the central image is described as composed of three colossal heads, about fifteen feet in height; the central has an expression of undisturbed composure; the one on the left, of benevolence; while the third is calculated to strike terror into the beholder. But these temples, as well as those in Central and North-western India, contain numerous instances of sculpture on a gigantic scale, but which there is no time even to allude to.

Engraving, though defined to be the art of representing objects by cutting wood, stones, and gems, or metal, is often applied only to such works as are intended afterwards to be communicated to paper, but the term also denotes some ancient branches of the art, as gem, and

seal, also die engraving, of which we have some reliques of antiquity which excel in their exquisite polish. Engraving inscriptions on stone is one of the most durable modes of preserving records, and has been practised in the East from the earliest times of which we have any notice. In India the long inscriptions of Kapurdegiri, Dhauli, and Girnar, show that the art must have been practised in great perfection at periods at least as ancient as the expedition of Alexander. The *lath* or pillars at Delhi and Allahabad are inscribed with similar inscriptions; and the numerous plates of copper which have been found in all parts of India, engraved with grants or agreements for leases of land, and which have proved the most authentic, and in many instances the only, records of lines of sovereigns, prove how general has been the prevalence of the art of engraving in all parts of India. The engraved seals from Delhi, which were in the Exhibition, are excellent specimens of the art of gem-engraving; and many of the precious stones have been inscribed with verses from the Koran, which enhance their value in the eyes of their Mahomedan wearers.

As a gold and silver, as well as copper coinage, has long existed throughout the country, it might be supposed that this also was an art which had originated in India; but I believe that the careful investigations of the most competent observers have not traced any vestiges of the art beyond the age of the Seleucidæ, whose purely Greek coins are succeeded by some having a Greek inscription on one side, and an Indian on the other, and these by coins

having a native inscription on both sides; and this through a long series of princes.

Raising figures on metal, on vessels, or on precious stones, is likewise an original Oriental art; but as the Persian worshippers of fire, as well as the Mahomedans, objected to images, we have often, therefore, only inscriptions where we might have had raised figures. But a few of the Hindoo vessels are ornamented with probably sacred figures, or of the signs of the zodiac, or with Hindoo mythology, as is even a sword-blade from Lahore.

Mosaics and Inlaid Work.—The art of cutting marbles and still harder substances into patterns, and then filling them up with cornelians and precious stones, is practised with great skill in the northern parts of India, as is evident from the vessels of Jade from Lahore, which are inlaid with rubies, emeralds, and diamonds, and which have been referred to before, and may be mentioned again under this division. So the marble inkstands, card-trays, and chess-tables, inlaid with agates, &c., from Agra, have excited admiration, and had a prize awarded them. These specimens are conspicuous for the clear and well-defined insertion of the different stones, the delicate and graceful leaf and flower-stalks, as well as for the happy combination of colours in the flowers and patterns represented. It is supposed that this art must have been introduced into India in the time of Acbar or of Shah-jehan; for in buildings erected by the former at Agra, Bishop Heber describes the ornaments, carving, and mosaic of the smaller apartments as equal or superior to anything in the Alhambra,

and of a cascade of water he says, that it gushes through marble channels, beautifully inlaid with cornelians, agates, and jasper. In the Taj-Mahul erected by Shah-jehan in memory of his Begum, Noor-jehan, the walls, screens, and tombs, are covered with flowers and inscriptions, executed in beautiful mosaic, of cornelians, lapis-lazuli, and jasper. These I have seen myself and admired, as well as similar works in the palace of Delhi. They are all similar, but not superior in workmanship, to the productions we have had sent to the Exhibition from the living artists of Agra. Drawings are sold, both at Agra and Delhi, of these mosaics, and having bought them when there, I can refer to the plants which are represented. These ought to give some indications of the country of the artists; and though they do not appear to be Indian, yet they are as like those of Caubul and of Persia as of Europe. The crown imperial, which seems to be one of those represented, is a native of Cashmere as well as of Europe. If the art was introduced into India from Italy, the people may boast of not shaming their teachers.

Enamels.—Having already called attention to their skill in enamelling, I need not do more here than refer to the beauty of the flowers, birds, &c., which are delineated, and with the pleasing harmony of the colours which they employ. The specimens of enamelled arms and jewellery from Cutch, Scinde, Kotah, Dholepore, Lahore, and Kangra, show that the art is practised with the greatest skill along the north-west frontier of India. It is probable, that if the form of the articles were adapted for European use or ornament, a considerable sale might take

place here of the best enamels from India. A good account of the mode of enamelling in the East would be very interesting, and might afford valuable hints.

Patterns.—The beauty and variety of patterns in the various articles which we have referred to, as well in the carved or engraved, as in the painted, printed, woven, or embroidered works, combined as they so frequently are with harmony of colouring, require notice in this section of our arrangement; and, as I have elsewhere said, this we see, whether we examine a production of Dacca, or one from Delhi, Benares, or Ahmedabad, Rajpootana, or Hyderabad, from Madras or from Mooltan, Cashmere or Khyrpoor, and whether in a common chintz or in a fabric of silk, or one enriched with silver or gold, or with imitations of gems. In all we see the utmost variety kept in bounds by the nicest taste; for even the most flowery and gorgeous appear never to exceed what is suitable to the material and the purpose to which it is to be applied. Mr. Digby Wyatt supposes the happy effects of Indian designers to be due to the refinement of taste engendered by their traditional education, and that this precludes their toleration of any departure from those harmonious proportions which the practice of ages has sanctioned as most pleasing and agreeable; Mr. Owen Jones states, that "one guiding principle of the ornamentation of the Orientals appears to have been that their decoration was always what may be called surface decoration. The patterns of their shawls and carpets are harmonious and effective, from the proper distribution of forms and colours, and do not require to be heightened in effect by strong and positive

oppositions. In their scroll-work, the ornament and the ground occupy equal areas. To obtain this effect requires no ordinary skill, and it can only be arrived at by highly-trained hands and minds."

Among the Fine Arts, *Music* is usually included, but of this I have no intention to treat, beyond briefly stating that music has been paid attention to by the Hindoos from very early periods, is treated of in their ancient works, and that it is acknowledged by competent judges to be constructed on scientific principles. Also, that though some of the airs are pleasing to European ears, yet that the effect is generally considered to be noisy and disagreeable. Among manufactures, we may, however, notice their instruments, of which they have every variety. They make use of the natural products of their country; as, for instance, bamboos and horns for pipes and blowing instruments, gourds to act as sounding-boards to their stringed instruments. The bamboo, besides being used for pipes, is sometimes formed into a compound instrument, in which bamboos of different sizes and lengths, being fixed in a framework of lathe, and shaken, emit different sounds, which it is curious to observe are strictly tuned to octaves. For the construction of their drums, they use wood, metal and even earthenware; and though uncouth-looking, it is remarkable that, as far as rhythm is concerned, they have been considered by competent judges to be superior in construction to European drums. Among the Burmese instruments is a circular one, within which drums of various sizes are suspended, so that each, when struck, gives a different note. Many of these instruments would,

no doubt, be interesting to elucidate the history of musical instruments; for it is probable that many have remained unchanged from very early periods.

Architectural Models.—Architecture is one of the fine arts which, from the usual permanence of its materials, ought to enable us to judge of the antiquity of the arts in India, and of the different degrees of merit of the several races who have inhabited that country. But the destructive effects of the climate, deluged at one time with incessant rain, and parched up by a furnace-like heat at another, is very unfavourable to the permanence of buildings, especially as the soil is in many parts impregnated with various salts, which corrode the walls at the surface of the ground, at the same time that the seeds of the sacred fig-tree, or *peepul* (*Ficus religiosa*), will vegetate on the top of a wall, the ledge of a pyramid, or the smallest crack in a dome, and sending its roots downwards, even between the driest stones and mortar, will, in course of time, destroy some of the most substantial buildings. Among the models sent to the Exhibition, we have had specimens of some of the styles of architecture which prevail in India; for instance, the carved wooden models of the musjids or mosques from Ahmedabad, give us specimens of the Saracenic style which was introduced by the Mahomedans, and of which so many splendid remains are to be seen in the tombs round Agra and Delhi. Of the Buddhistic architecture, which is conspicuously displayed in the rock-cut temples of Elephanta, Ellora, &c., and which has been so amply illustrated by Mr. James Fergusson, we have had no specimens; nor of the Jain temples of Rajpootana, which have been described

by Colonel Tod as monuments of simple grandeur or of elaborate elegance. But the stone models of the Hindoo temples sent from Benares and Mirzapore give a very correct idea of the general pyramidal appearance of such temples in the Gangetic valley. The various varieties in Hindoo sacred architecture are, according to Colonel Tod, distinguished by the forms of the pinnacles, which spring from and surmount the perpendicular walls of the body of the temple. The ivory-like yet pith models of the Nagossorun pagoda at Conbaconcan, and of the unfinished entrance to the pagoda at Strearangum, give a good idea of the pyramidal yet truncated and elaborately-sculptured temples of the south of India. I will not attempt to enter into the peculiarities of each of these styles, as that would require a lecture to itself by one competent to the task; nor have I attempted to trace these to any extraneous sources, because I believe them all, with the exception of the first, to be original productions of India, and well worthy the attention of architects who study the history and vast variety of their science.

Conclusion.

Having thus taken a general view of most of the arts and manufactures of India, as displayed at the late Exhibition, I may briefly refer to the omissions,* such, for instance, as their different tools and models of their simple

* Among these, *mixed fabrics* may be noted, as more ought to have been said of the various mixtures of silk and cotton, wool and cotton, wool and silk, &c., which are made in India. Some composing the entire fabric; others, in alternate stripes or checks of the two materials.

machinery, as well as of their shipping. The former would have afforded abundant opportunity for remark, as well as for admiring the ingenuity with which important ends are attained by simple means; but as the tools have been carefully examined by a most competent professor, and the collection will not be dispersed, opportunities will occur to others for observation. Among the models of shipping it would have been interesting, if I had felt equal to the task, to have examined the forms of such as are remarkable for their swiftness, especially as some of these are said to outsail any European craft against which they have been matched, and the lines of the Sampan of the Malayan seas are said to correspond very closely with those of the now famed "American." But time will not allow to do more than to allude to such subjects for the purpose of attracting the attention of others.

Before concluding, I trust I may be allowed to make a few observations on what may appear to many the too favourable view which I have taken of the state of the arts in India. In the first place, it should be remembered that the several specimens have generally been sent from the places where the respective mechanics and artists have attained the greatest skill; and secondly, that in most instances the articles have been selected by committees of European gentlemen. This would, however, have been of little avail, if the natives who produced the articles did not themselves possess both skill and taste; but the process may have excluded some things which did not come under this category. Europeans in India are, in general, little given to over-estimate Indian productions, and their true

value has only been determined by the observations of many of the best qualified judges at the recent Great Exhibition. Though many of the officers of the various Indian committees have stated that much more highly-finished articles might have been sent if more time had been allowed for their preparation, yet Europeans, in general, speak and write disparagingly of the different manufacturing processes adopted by the natives in India. Thus, without making sufficient allowance for the simplicity of the means by which they attain important ends, and for which others require a complicated apparatus, we have observations on the rudeness of the processes, and this without adverting to the curious fact of uneducated natives being found in almost every bazaar who can make alloys, colour glass, and work enamels by methods which are unknown in Europe. Another great anomaly, often animadverted upon, is the apparently unfinished state of some productions, and how ill-assorted are the different parts of other made-up articles; as, for instance, where we see a coarse iron ring in the midst of elaborately-worked gold and silver trappings. But we may see the same anomaly in a highly-finished French clock, with a key which in England would be thought unfit for a common cupboard. But this is a point connected with a more general subject, that is, the causes which influence the greater or less developement of the several arts and manufactures in different countries. I refrain from pursuing it, but refer to another subject, that is, the immobility, as it has been called, of the natives of India, and of their remaining stationary at points which they seem to have

reached many ages ago. But this is far better than the retrograde progress of other nations, which were civilized at as early periods. Though we are without the means of accurate comparison with the state of the arts in India at earlier periods, yet in some of them we have seen, that, if stationary, they are so only at points which others have hardly yet reached. That the natives are capable of attaining almost any degree of excellence in the various arts, we have the most convincing proofs in the specimens now before us, and which form a very small part of the Indian collection. If other proofs are required we have them in the works which are turned out from the different Government magazines and arsenals, and of which we had numerous specimens in the accoutrements and models of artillery from the different Presidencies. The same may be observed in the teak shipping built at Bombay. In addition to these several works produced under Government officers, we might adduce the several manufactures carried on by Europeans in India; of these we had specimens of harness, and dress boots sent by Messrs. Monteith of Calcutta, which would have done credit to any shop either in London or Paris. The same might be said of the model of the palanquin by Mr. Simpson, from Madras, or of the specimens of ropes, in imitation of those in use in Europe, by Messrs. Harton, of Calcutta, and which, if made with the *Rhea* fibre of Assam, would be stronger than any in Europe. The saw-gins made up in India by native mechanics have been found to be as efficient for cleaning cotton as the machines sent out from this country and from America; while the delicacy as well as accuracy of

native work may be seen in the coin-sorting machine of Major Smith, of the Madras Engineers, for which a Prize medal was awarded by the Jury of Class X.

But still greater and more widely-diffused effects than the above may be expected from the influence of the different schools and colleges which have been established in various parts of India, especially as some of these purpose imparting mechanical and scientific information, in addition to a knowledge of languages; and we have seen the great benefits which have been derived from the establishment of the several medical colleges at the different Presidencies. Some of the results produced by the School of Arts at Madras, under the superintendence of Dr. Hunter, have been shown at the Exhibition, in the improved pottery, for which a Prize medal was awarded. A school for elementary mathematical knowledge and mechanical science has been established by Col. Cautley, at Roorkee, the head-quarters of the great Ganges canal, now in course of formation. There it is proposed to instruct both Europeans and natives in the several subjects which will qualify them for situations, not only on the canal, but probably also on railways. The college at Poonah has determined on including instruction in the principles of the mechanical arts in their course of education; some machines have already been imported, and among others, the improved hand-loom: with the flying shuttle of this the weavers of Poonah were greatly astonished and pleased. Professor Cowper has been applied to, to devise models of machinery fitted for the use of the natives of India, and has already constructed a throstle spinning-machine to be worked by hand, which he has

brought here this evening, and will, I hope, show to the members after the Lecture. [This was done.]

But, even without any mechanical improvements, which may assist in cheapening some of their products, there are enough, which are the produce of their patient habits and wonderful delicacy of hand, and are also examples of purity of taste, which may command a sale in European markets. Though the Muslins, both plain and flowered, are greatly admired, yet, as being the produce of many months of hand labour, they are unable to compete in price with those which are the produce of European machinery; but as they are still preferred in India, a few may continue to be bought in Europe. Their Calico Prints, Flowered Silks, and rich Kimkhobs, being much admired for their patterns, may be applied to a variety of ornamental purposes; if not of dress, still of decorative furniture. The Shawls of Cashmere still continue unrivalled, and command the highest prices. The Embroidery being equal to anything produced elsewhere, only requires that the things embroidered be fitted for European use, since the cheapness of all hand-work in India will insure the prices being reasonable. The manufacture of Lace at Nagercoil may be safely undertaken; and the Carpets, Rugs, and Carved Furniture, would command a ready sale if offered at rates moderate in proportion to the cost in India. The Wootz Steel might be largely consumed, and the highly-wrought Arms would be bought as curiosities, as well for the artistic skill displayed in the cutlery as in the inlaying. Well-shaped Pottery and the highly-finished Bidery ware, as well as the Lacquered boxes of Cashmere, would all be bought,

as also the various works of Bombay-inlaying, of Ivory, Horn, Ebony, and Sandal-wood, likewise Mats, Baskets of Khuskhus, and of other materials, and Japanned Boxes. To these we may add the polished Agate-ware of Cambay, the Inlaid Marbles of Agra, and the Enamels of Cutch, Scinde, and of north-west India; also the Filagree work of Cuttak, Dacca, and Delhi, as well as of other places; likewise some native Jewellery, if made in the forms fitted for European use. Even the Toys would command a sale, and the Models of Fruits, as well as the Figures of Natives of different castes and trades, would find purchasers if they could be easily procured.

That I may not appear singular, especially to people in India, in my estimation of the value of these Indian products, I would beg, before concluding, to adduce some unconnected and independent testimonies. For this I may first refer to the articles in "The Times," which were distinguished as much by their talent as by their discriminative criticism. "Turning to the class of manufactured articles, we find the long-established industries of the Indian Peninsula asserting their excellence in a manner at once characteristic and extraordinary. The same skill in goldsmiths' work, in metals, in ivory-carving, in pottery, in mosaics, in shawls, in muslins, and carpets, was attained by those ingenious communities which now practise them ages and ages ago. Yet, in these things, which the natives of India have done well from time immemorial, they still remain unsurpassed."—*April* 25. And again, "Yet, in another point of view, these remarkable and characteristic collections have a value that can hardly be

overrated. By their suggestiveness the vulgarities in art-manufactures, not only of England but of Christendom, may be corrected; and from the carpets, the shawls, the muslins, and the brocades of Asia, and from much of its metallic and earthenware products, can be clearly traced those invaluable rules of art, a proper definition and recognition of which form the great desiderata of our more civilized industrial systems."—*Times, July* 4.

So, M. Blanqui, in his "Rapport" to the "Académie des Sciences Morales et Politiques de l'Institut," observes, "Les produits de l'Inde Britannique méritent l'attention du technologue autant que celle du philosophe et de l'économiste. Il y a vraiment un art Indien qui a un cachet de distinction comme l'art Français, et de plus une originalité souvent élégante et de bon goût.

"Cette brillante partie de l'Exposition a produit l'effet d'une révélation. Elle a été si complète, si riche, si bien agencée, qu'elle représentait l'Orient tout entier depuis les temps les plus reculés jusqu'à nos jours.—Les Indiens sont les Français de l'Orient pour le génie industriel: il ne leur manque que nos connaissances positives; mais ils sont aussi artistes dans leur genre que nos plus habiles dessinateurs de Paris, de Lyon, et de Mulhouse," &c.—P. 238.

Again, in his letters, M. Blanqui says, "C'est tout un monde industriel nouveau pour nous, par son antiquité même, qui remonte aux temps héroïques, et par son caractère d'originalité à nul autre semblable. Depuis le commencement de l'Exposition, nous voyons tous les jours apparaître des produits nouveaux, plus admirables les uns

que les autres, et qui attirent au plus haut dégré l'attention des visiteurs.

"L'art Indien mérite, en effet, cette préférence: il ne ressemble à aucun autre. Il n'a point la bizarrerie du goût Chinois, ni la regularité Grecque et Romaine, ni la vulgarité moderne: c'est un art à part, conséquent avec lui-même, plus sobre qu'on ne pense jusque dans ses écarts, et qui semble n'avoir jamais varié ni emprunté quelque chose à autrui. Dans la céramique, il est plein de grace et de simplicité," &c.—P. 79.

"Evidemment, l'art de tisser les étoffes est arrivé, dans ce pays, à un état fort avancé. Sans parler des châles de Cachemire, qui sont devenus les types du genre, tout ce que la Compagnie des Indes a exposé semble une collection de chefs-d'œuvre. Moussellines brodées d'or, fichus diaprés de milles couleurs, écharpes éclatantes du goût le plus exquis, tapis de table émaillés de fleurs, tissus de toute espèce *niellés* de vert émeraude, selles, manteaux, étoffes pour tentures, mouchoirs d'odalisques à petits carreaux d'un rouge tendre, quadrilles d'argent, toutes les nuances que la nature a prodiguée aux ailes des papillons se retrouvent dans cette collection Indienne, qu'une Compagnie aussi puissante que celle des Indes pouvait seule réunir par ses ordres souverains. L'Orient tout entier est accouru à sa voix."

I may fitly conclude these quotations with an extract from a letter of the Government Committee for the selection of articles for the use of the Schools of Design, addressed to J. C. Melvill, Esq., Secretary to the Honourable East India Company. "We have to request that you

will acquaint the Court of Directors, that having duly examined the collection exhibited by the Court, we have found it to contain, beyond any other department of the Exhibition, objects of the highest instructional value to students in design, and that we have selected the accompanying list of articles from their collection, which we express a hope may be secured for the benefit of the Schools." The Committee selected about two hundred and fifty; as some belonged to private individuals, they were able to purchase nearly two hundred articles out of the Indian collection for the use and improvement of the Schools of Design in this country.

After these favourable testimonies, I regret that I am unable to conclude this subject with a notice of the several medals which have been awarded to the native manufacturers of the various textile fabrics, from muslins to carpets, or to the producers of the several other works in which manual dexterity was combined with taste; for, with the exception of the mosaics from Agra, and the sandal-wood carving from the Malabar coast,* the rest must be enumerated among the omissions with which the international juries have been charged. That the articles exhibited were not without sufficient merit is evident from the testimonies which I have quoted, as well as from the universal admiration which they excited. A French gentleman to whom I mentioned the fact, while he was en-

* The latter was voted to the European owner of a sandal-wood box; but the medal for Agra Mosaics to the East India Company. This will be sent to the producer in India, as the Court of Directors promised to make over any prizes to the parties from whom the articles which might be rewarded had been purchased.

thusiastically admiring the various works, pithily observed, "Tant pis pour les jureurs." But though it would have been graceful for the judges of the West to have sent some tokens of their approval to the absent and anxious manufacturers of the East, these may yet enjoy the proud consolation of thinking, that a Committee of the British Government, composed of some of the best judges, found the Indian collection to contain beyond any other department of the Exhibition objects of the highest instructional value to students, and supported their opinion by extensive purchases; while a representative of France has pronounced them to be "the Frenchmen of the East for industrial talent."

In the course of his remarks on the foregoing Lecture, and on the striking examples of Indian art and manufacture, which, by the kindness of the Court of Directors of the Hon. East India Company, were exhibited in illustration of it, Mr. Owen Jones, the Chairman, observed, that with all the artists of England with whom he was acquainted, as well as with foreign visitors, he had found but one opinion,—viz., that the Indian and Tunisian articles were the most perfect in design of any that appeared in the Exhibition. The opportunity of studying them had been "a boon to the whole of Europe." Many have been purchased by Government for the use of the Schools of Design,—and will no doubt be extensively circulated throughout the country. But it is to be hoped, said Mr. Jones, that they will do more than merely teach us to copy

the Indian style. If they only led to the origination of an Indian style, he would think their influence only hurtful. "The time has arrived," he added, "when it is generally felt that a change must take place—and we must get rid of the causes of obstruction to the art of design which exist in this country. Ever since the Reformation, when a separation took place between religion and art, England has not had anything like a style of her own. In every country which is under the influence of a particular religion, there a peculiar style of art is created. Such is the case with the Mohamedans, Greeks, and others.—There now seems to be a general feeling and desire for art, and something must be done. I think the Government may be induced to assist in forming schools throughout the country on a different footing from that on which they are at present established. We see in the ornaments and articles from India the works of a people who are not allowed by their religion to draw the human form, and it is probable that to this cause we may attribute their great success in their ornamental works. Here in Europe we have been studying drawing from the human figure, but it has not led us forward in the art of ornamental design. Although the study of the human figure is useful in refining the taste and teaching accurate observation, it is a roundabout way of learning to draw for the designer for manufactures. It is to be hoped, as this Society is assisting in the formation of elementary schools, that it may be able to find a better means of producing the result in question."

February 18, 1852.

LECTURE XII.

ON THE PROGRESS OF NAVAL ARCHITECTURE, AS INDICATING THE NECESSITY FOR SCIENTIFIC EDUCATION, AND FOR THE CLASSIFICATION OF SHIPS AND OF STEAM-ENGINES: ALSO, ON LIFE-BOATS.

BY

CAPTAIN WASHINGTON, R.N. F.R.S.

CAPTAIN WASHINGTON, R.N.

ON

THE PROGRESS OF NAVAL ARCHITECTURE, AND ON LIFE-BOATS.

THE progress of Naval Architecture, as illustrated by the models of boats and shipping collected together in the Great Exhibition—in that vast building, along the avenues and galleries of which we all lately wandered day by day, dazzled with the treasures and wonders of art—forms an interesting and instructive study. Who could fail to be struck by the contrast presented by the ancient Celtic boat, the *curragh*, still in use for fishing on the north-west coast of Ireland, or the equally primitive *coracle* daily used for salmon-fishing in the rivers of Wales, as compared with the magnificent specimen of the *Queen*, one of the largest and most beautiful ships of the British navy, which, in the centre of the north transept, arrested the eye of the observer, as soon as the gorgeous and overpowering *coup*

d'œil that burst on us all at entering, gave leisure to reflect.

Amidst the sparkling of the crystal fountain, backed by a forest of tropical plants, and with the rich hangings of Persia and India on either hand, there sate the *Queen* of the ocean, simple, severe, yet beautiful in form, a type of the progress of art as applied to ship-building during the last eighteen centuries. The transition from the inconvenient and unsightly forms of antiquity to the graceful outline and imposing contour of a first-class ship-of-war, is no less remarkable as an indication of progress in this science, than instructive as practical evidence of the consistency of beauty of form with those qualities of speed, strength, stowage, and stability, which are essential in such structures.

The Exhibition of 1851, although rich in beautiful models showing the present state of naval architecture, afforded only in a small degree the opportunity of tracing the successive steps in the history of ship-building. It is true that there might be seen the primitive British *coracle* of wickerwork covered with hide, carrying us back in imagination to the time of our forefathers, and its contemporary, a Roman war-galley; but from that period we jump over some centuries until we arrive at the model of the *Henri Grace à Dieu*, of 1200 tons, built at Erith about the year 1513.

We would gladly, however, have seen the connecting links in the chain; as the model of the vessels in which the enterprising Scandinavian Sea-kings performed their

almost incredible voyages out of sight of land, without the aid of compass or of chart, and with only the sun and stars, and flight of birds, to guide them; and of the Mediterranean galley pulling from forty to sixty oars on each side, which our great King Alfred introduced to resist the ravages of the Danish marauders. We have no record either of the form or probable size of ships at the period of the Norman Conquest, unless it be the picturesque representations of Froissart, or the more grotesque specimens of the Bayeux tapestry. Nor of the introduction of sailing vessels, although the ancient chronicles tell us that when Prince William, son to Henry I., was drowned in crossing from France to England, three hundred persons perished with him, implying considerable burthen in the vessel. We learn, too, that a little later the commercial intercourse between France and England, in wines, wool, and woollen cloths, was extensive, which could not have been carried on profitably except in sailing vessels. The expedition of Richard Cœur de Lion, in 1190, to join the crusade to the Holy Land, consisted of nine "tall shippes," besides one hundred and fifty others of smaller size, and galleys. But it was in the beginning of the fourteenth century that the invention of the mariner's compass, by Gioja of Amalfi, gave the great impulse to ship-building, by enabling vessels to make long voyages in comparative safety. A century later the burthen of the largest ships appears not to have exceeded six hundred tons,—yet, at this time, the mercantile shipping of England must have been considerable, for, about the middle of the century flourished the celebrated merchant, William Conynge, of

Bristol,—the builder of the beautiful church of St. Mary Redcliff, in that city,—who, among other vessels, owned the *Mary and John,* a ship of 900 tons.

The next step in advance was the building of the *Great Harry,* about the year 1488, in the time of Henry VII., which well deserved the record of a model as the parent of the British navy. It was high time that this island, if she wished to take any place among maritime nations, should be up and doing, for other countries were fast increasing the size of their ships, and pursuing the path of discovery, which was the first step towards that intercourse which has resulted in bringing to our shores—and to the Great Exhibition—the silver and gold, the cotton, the coffee and sugar of the West, with the pearls, the ivory, and silk of the East. For it was only a few years later that Spain, in 1492, fitted out the ever memorable fleet—small as it was and of crazy ships—that enabled Columbus to prove to incredulous Europe the existence of a new world, and that Portugal equipped the expedition in which Vasco de Gama, in 1497, rounded the Cape of Good Hope, and laid open the route to the East; to be followed within half a century by the zealous Padre Francisco Xavier, the "Great Apostle of the Indies," who, in return for the myrrh, and the spices, and the frankincense of the East, first imparted to the natives of India the more precious gift of the Gospel of Christ.

The *Henri Grace à Dieu,* before mentioned, comes next on the list. This model, now lying on the table before us, and for which we are indebted to the liberality of the Ad-

miralty, shows two tiers of port-holes; but the lower battery so little raised out of the water, that it is doubtful if she could have sailed with safety on a wind; and we know by the loss of the *Marie Rose* at Portsmouth, a little later in this reign, that, owing to her ports being within sixteen inches of the water, in going about she upset and sunk, when six hundred persons perished. At so comparatively low a state was nautical skill in this country, that fifty Venetian sailors were hired to try and raise this wreck; their attempts, however, all failed, as the wreck of the *Marie Rose* remains, to this day, at Spithead; and so lately as August 1836, several of her brass cannon, of exquisite workmanship, were recovered from the bottom of the sea by the skill of the late William Deane (well known by his successful submarine operations by means of the diving-helmet), and are now lying in the Repository grounds at Woolwich.

The spirit of enterprise that prevailed during the reign of Elizabeth could not fail to have some influence on our ships, and the indefatigable and politic Raleigh directed his attention to the improvement of our navy. Sir Robert Dudley, afterwards Duke of Northumberland, a man of enlarged views and comprehensive mind, paid also much attention to naval affairs. He purposed to lower the forecastles and sterns of ships, and to abridge their then cumbrous ornaments; to raise their lower batteries, and to increase their length, so as to render it equal to four times their breadth. But as his views did not meet with the encouragement which he expected from the government, he constructed a ship at his own expense, and made a

voyage to India in 1594. It may be remarked, that Sir Robert gave the plan of a vessel which he called a *fregata*, which may have led to the construction of the frigates now so generally known.

Singular as it may appear to us at the present day, ships-of-war at this time did not stow any provisions; they were carried by an attendant vessel called the "victualler," of which one was attached to each large ship. The space in the hold, not taken up by the enormous load of shingle ballast required to counterpoise the heavy top hamper, was used as a cook-room; and so lately as the year 1715 several ships-of-war had cook-rooms in their holds.

Passing over another half century, we come to the model of the *Sovereign of the Seas*, or, as called later, the *Royal Sovereign*, of 100 guns, and 1861 tons burthen, built at Woolwich in 1637 by Mr. Phineas Pett. This vessel marks an epoch in the art of ship-building as being the first constructed in England on scientific principles, Mr. Pett being a good mathematician, a graduate of the University of Cambridge.

Another step in improvement was effected by Sir Antony Deane, in 1665, who built the *Warspite* and *Defiance*, to carry six months' provisions, and their lower-deck guns to be 4½ feet out of water. He also has the credit of having been the first who calculated a ship's draft before she was launched. The dimensions of the Spanish ship *Princesa*, of 70 guns, which fell into our hands in the year 1740, caused a revision of our establishment in 1745, and the *Royal George*, of increased dimensions, was

launched in 1756; this ship, which upset at Spithead in 1782, was one of the first that had her bottom sheathed with copper. In the same manner, eleven years after she came into our possession, we built, after the *Invincible*, a French 74-gun ship, and thus got some fine ships, but the practice was not persevered in. The *Commerce de Marseille* formed the ground-work for the *Caledonia* of 120 guns, launched at Plymouth in 1808; but the *Canopus*, of 84 guns, taken in 1798, and acknowledged on all hands to be an admirable specimen of naval architecture, was not adopted to be the model for 84-gun ships of the British navy before the year 1821; and even then by the mode of practical carpentry of the hull pursued in our dockyards, and the weight of stores and provisions considered necessary for efficiency, the whole weight of the ship was increased to such an extent, that the displacement caused by it brought the lower-deck midship port of the British 84 full 18 inches nearer the water than that of her French prototype! It is needless to follow the history further; suffice it to say, that all who served in the blockading fleets during the last war were painfully alive to the fact of the comparative inferiority of our ships to those of France and Spain in speed, stability, and readiness in manœuvring. It is true that the skill of our commanders, and the courage of our seamen, eventually succeeded in triumphantly asserting our naval superiority, but much loss of life might have been spared had our ships, in form, been more on a par with those of our opponents.

Let me not be misunderstood. I am far from wishing to speak slightingly of those who have done good service

to their country, or to deny the great merit of many of our practical builders; but there must be some reason for the admitted inferiority above alluded to; and I can only attribute it to the cause that in France and Spain, and other Continental countries, the aid of science has been called in, and some of the greatest mathematicians of the age have turned their attention to the improvements of the shipping of their country. Colbert, the enlightened minister of Louis Quatorze, employed Rénau, who was, we believe, the first French author that wrote on the theory of ships. He was followed by the two Bernouillis, by Père la Hoste, by Bouger, Euler, by the Spaniard Don Jorge Juan, by Romme, de Borda, l'abbé Bossut, the Swedish Chapman, Chauchot, Clairbois, Dupin, and others, whose writings and discussions must have had a powerful effect towards bringing about the improvements introduced into the navies of France and Spain.

What has been done in England to set against such names? The only English treatise on ship-building at that time that can lay any claim to a scientific character was published by Mungo Murray in 1754; and such was the encouragement he received, that he lived and died a working shipwright in Deptford Dockyard. England has not, to this day, one original truly scientific treatise on the subject in her language. Certainly we have some papers and tracts of modern times, as those by Atwood, on the stability of ships, in the *Phil. Trans.* for 1796–8; the translations of Chapman's great work, by Dr. Inman, to which he has added some valuable notes; the experiments made by Col. Beaufoy in 1791, on the resistance

of fluids, chiefly at his own expense, and since his death published by his son, Mr. Henry Beaufoy, in a 4to. vol., and gratuitously distributed; an act of munificence in the cause of science worthy of the disinterested labours of his father. But the most valuable contributions to this science are the papers* written by the gentlemen of the School of Naval Architecture, established in 1811; yet, after a few years suppressed, while almost all those brought up in it were, for a considerable length of time, kept in subordinate situations,—men familiar with the differential calculus kept chipping timber in our dockyards,—and even now, more than forty years from its first establishment, only five out of the forty-two men there educated have risen to any stations of responsibility! Honour, however, to whom honour is due; the good seed they have sown, we trust, has not been lost; the correct principles of naval architecture laid down by them have become known and generally diffused, and though the *élèves* of the school may not reap the reward, the merit is undoubtedly theirs; posterity will do them the justice which the present age has hitherto denied them.

More recent contributions to the science are an admirable treatise by Creuze, in the *Encyclopedia Britannica;* Scott Russell's Experiments on the Wave-line as applied to Shipping; Professor Moseley's papers in the *Phil. Trans.* on Dynamical Stability, &c.; Peake's "Rudimentary Treatise on Ship-building;" and Fincham's "Outlines of Ship-building," and "History of Naval Architecture."

* Published in the "Papers on Naval Architecture," 1826 to 1832. Edited by Messrs. Morgan and Creuze.

These few later works are recent, and are, we trust, a type of better things to come. The fact is undeniable, that in England science *was* (I trust I may not say it *is*) at a discount. It has already been proclaimed within these walls, on far higher authority than mine, that abstract science must be cultivated if we are not to fall in arrear of other nations. However the term may be slighted by some, who from time to time have managed the affairs of this nation, the study of abstract science, and the systematic pursuit of the study, cannot be dispensed with, if we wish to make true progress in a question which involves the considerations of such abstruse subjects as dynamical stability and the oscillations of floating bodies.

We are invited, in the letter to the Society of Arts, conveying His Royal Highness's suggestions for these Lectures, "to state freely and without reserve our opinion upon the probable immediate effect of the Exhibition on the particular subject of each lecture." What may be its effect with respect to naval architecture and naval affairs in general, it would be difficult to predict; but one thing is certain, that the Exhibition has brought into striking relief the want of union between science and practice, the want of more intimate communication between scientific and practical men, and has shown the mischief likely to arise if the wall of separation be not broken down. Not only is this true in naval architecture, as shown in a former part of this Lecture, but it is equally true as respects the want of elementary instruction of our naval officers. As steam advances, we must give a mathematical instruction to those who are to command steam-

ships, or we shall be left far astern in the race. What is the education now afforded to youngsters entering the navy? A name without the substance. They may by chance pick up some navigation when the other duties of a ship will admit of it; but as to any systematic instruction, it is out of the question; the very nature of the duties on board an active ship forbids it, however desirous the captain may be to forward it; the result is, that when a few years later the boys come, as men, to study steam, it is no uncommon thing to find that they have to begin with decimals and the elements of algebra. How are we to maintain our ground with neighbouring nations where a cadet is kept for the first two or three years after entering the navy strictly at his studies? I do not advocate the re-establishment of the Naval College on shore, but I would earnestly recommend some plan or other, by means of which boys can be educated; why not a naval school on board a line-of-battle ship moored at Spithead, where systematic instruction in mathematics—the groundwork of a knowledge of steam—and practice in the earlier part of seamanship, might be combined? Unless something of this sort be done, I fear, as steam advances, this country will be left more and more in the background.

Having mentioned the name of Dr. Inman, may it be permitted to a former pupil, in the name of his brother sailors, educated at the Naval College, and of the students in naval architecture, to offer a passing tribute of respect and gratitude to their former master and friend? Whatever little knowledge we may have, we all feel that it is

chiefly to the precepts and example of that able mathematician that we are indebted for it. The valuable notes appended to his translation of Chapman's *Architectura Navalis Mercatoria* prove Dr. Inman to be the highest authority on the theory of naval architecture.

One great inconvenience, arising from the absence in this country of the systematic pursuit of the study I have alluded to is, that there is very little recorded knowledge as to the various attempts at improvement which have been made. This may, perhaps, be illustrated by a short example, abridged from Mr. Creuze's treatise before alluded to. Could it have been possible, that there should have been an official receptacle for this traditional or registered knowledge as early as the sixteenth century, the improvements in shipping, resulting from the system of diagonal trussing, introduced by Sir Robert Seppings in 1810, would certainly not have been so long delayed; for its advantages were evidently suspected at that early period. But we will only take a more familiar and trifling instance. The Romans sheathed their vessels with lead, secured on the bottom with *copper* nails, as we know from a vessel of Trajan's weighed out of the lake of Riccia. In modern naval history, the Spaniards, according to Navarrete, first attempted this in 1514. The earliest ships sheathed with metal in England were those fitted out in 1553 to discover a north-east passage to China, or Cathay, under Sir Hugh Willoughby. Lead-sheathing was again tried in 1671 on the *Phœnix*, and between that year and 1692, twenty ships were so sheathed. It

was then discontinued; but in 1768, the *Marlborough's* bottom was covered with lead, which was removed after a two years' trial. There is then a long interval until 1833, when lead sheathing was tried on the bottom of the *Success* in Portsmouth harbour, and in two years dropped off. Now, had these various experiments been on record, with the reasons of their failure, those causes of failure would not, in all probability, have been repeated in each successive experiment; and, certainly, the lead on the bottom of the *Success* would not have been secured with *iron* nails. It is not improbable, also, that centuries ago some method would have been ascertained of advantageously applying that less costly metal, lead, to the bottoms of hulks, and all stationary vessels, and thus many hundred tons of copper might have been saved to the nation, by a lesson first taught by the *copper* nails in the sheathing of a Roman galley.

To return to the Models of the Exhibition.

The general peace, amongst other blessings, happily brought a change in the system of ship-building. The weakness of ships in straining and working had long been a subject of complaint, and great credit is due to the late Sir Robert Seppings for carrying into practice improvements suggested by himself and others as early as 1806 and 1810. The chief of them were the filling in solid between the timbers up to the light-water line; the system of diagonal trussing for the frame; the connecting the beams with the sides, by shelf-pieces and thick waterways (first suggested by General Bentham, to whom the service is indebted for many useful improvements, both in

our ships and in our dockyards); and, though last not least, the circular stern, of equal strength with every other part of the ship, leaving no point indefensible.

It may be hoped, that we shall not lose sight of the object of the circular stern, and permit utility to be sacrificed to symmetry or to luxury; let us beware of our raking sterns and stern galleries, beauty of form is not an absolute essential to a ship-of-war, the power of depressing the stern guns, and of throwing the fire well clear of the ship, is an object of far more importance.

In 1832, Sir William Symonds succeeded to the office of surveyor of the Navy; and numerous models in the Exhibition, many of which are now on the table, show the difference of form of his ships to those of the old construction; among others may be mentioned the *Queen*, of 116 guns; *Vanguard*, 80; *Vernon*, 50; *Arethusa*, 50; *Pique*, 40; *Spartan*, 26; and *Flying Fish*, 12. Sir W. Symonds is the first constructor of the British navy who has been left unrestricted as to dimensions, and he has consequently been able to introduce into the service ships which undoubtedly bear a high character in some decided points of efficiency as men-of-war. He has also practically demonstrated the possibility of ships-of-war obtaining sufficient stability without the aid of ballast, which is an important advantage, and one which will be yet productive of essential benefit. These advantages, however, are, in some instances, gained at the expense of uneasiness of motion, which is produced by the form given to the sides of the ships immediately above and below their seats in the water, arising from the stability

of his ships being dependent chiefly on breadth of beam at the load-water section. But that Sir W. Symonds broke through an almost adamantine barrier of prejudice, and thereby conferred an important benefit on the navy, is now, we believe, universally acknowledged.

There were several other beautiful models of the experimental 50-gun frigates, to which my limited space will only allow me to refer, as the *Indefatigable,* by Mr. Wm. Edye; the *Leander,* by Mr. Blake; the *Raleigh,* by Mr. Fincham; the *Nankin,* by Mr. Oliver Lang, jun.; the *San Fiorenzo,* by Messrs. Reid, Chatfield, and Creuze; and the *Eurydice,* 26, by Admiral Elliot, &c. Among others, the sectional models of Mr. Joseph White, of East Cowes, deserve honourable mention, as the *Phaeton,* 50; *Daring,* 12; *Waterwitch,* 10; and the *Fox,* with her old and new bows, showing the peculiarity of this builder's long bow, which has proved itself superior to those constructed on the old plan. There were also six models from a line-of-battle ship to a cutter, intended to illustrate a principle advocated by Mr. White, that all vessels for the same service may be built from one design.

There were also models of sailing merchant-vessels, by Messrs. Wigram and Green, of Blackwall; and Smith, of Newcastle (whose ships in practical construction are equal to those built in the Government dockyards); White, of Cowes; Hall, of Aberdeen; Laing, of Sunderland, &c.; proving that, at length, our merchant builders have been compelled to enter on the career of competition, forced on them by the fast American liners, and which for so long a period our mischievous tonnage laws debarred them

from. While official dimensions issued by authority by men unsuited by education, or rather absence of education, to form any opinion on the subject, cramped the energies of our naval architects, the still-more-to-be-condemned tonnage laws operated as an effectual bar to improvement, in the forms of our mercantile shipping.

These laws were the immediate cause of the defects of English merchant ships, and were a glaring outrage on all true principles in the practice of navigation; they amounted in effect, to quote the words of Mr. Scott Russell, to an Act of Parliament for the compulsory construction of bad ships. The merchant princes of London and Liverpool, with their boundless wealth, proverbial generosity, and persevering enterprise, might surely have attracted the attention of men of science to the improvement of their ships, but to what avail, while fettered by that absurd statute, which has saddled this country with some two million tons of inferior shipping? Need we wonder at the amount of shipwrecks? The startling fact, that about two ships a-day throughout the year is the average number of wrecks registered at Lloyd's is a sad corroboration of the acknowledged truth that the mercantile navy of England has hitherto been the least speedy and the most unsafe that belongs to any civilized nation.

The old laws are now repealed; the effect of them, however, must for some time remain. But is the new law much better? A system of internal measurement as a rule for tonnage is strongly advocated by some of the most able of those who have inquired into the question,

including Mr. G. Moorsom; and, doubtless, there is much to be said in favour of it; yet the difference in the specific gravity of a cargo will show the difficulty of adopting that system: for instance, a West India ship of 470 registered tons carried 695 tons of sugar or coal, or 970 tons of mahogany timber, whereas, had she been laden with wool, she would have stowed only 380 tons of cargo! On the other hand the late Tonnage Commission of Revision, including Mr. Parsons, advocated external measurement; but this also has its difficulties, inasmuch as it is stated that an iron vessel might have an advantage over a fir-built vessel of the same external form and dimensions of 28 per cent. Lieut. Sharpe, R.N., and others, are in favour of the difference of displacement as a measure of tonnage, or the cubic contents of the space between the light and low-water lines measured externally for all vessels. Where so many able men have treated on a subject, it is not for me to offer an opinion upon the right rule. But thus much is certain, that the present system works ill; that there are ample materials before the public for settling the question; and that it ought to be settled, so as to leave the builder free to adopt the best form of vessel, without any further delay.

Notwithstanding the impediments alluded to, we trust that many of the improved models of merchant-vessels and yachts shown in the Exhibition may be hailed as the dawn of a better state of things,—of a fresh starting point in the art of ship-building,—and that the American clippers, the American liners, and the yacht *America*,—which, owing to the absence of prejudice and the aid of science in

construction and seamanship, have hitherto fairly distanced us,—may not be allowed to have the whole course to themselves. Let us acknowledge our defeats when they are real, and trust to British character and energy to make them victories on another occasion.

The mention of the *America* naturally leads us to the beautiful models of yachts belonging to the Thames Yacht Club: one of them, the *Nancy Dawson*, has circumnavigated the globe, and, as we all know, her late owner, Mr. Shedden, R.N., gallantly lent his aid in the search, by Behring's Straits, for Sir John Franklin and our missing countrymen. Six of the yachts are by Harvey, of Ipswich, and all the vessels, I believe, are winners of prizes. I gladly embrace this opportunity of saying how much naval architecture and the naval service generally are indebted to the spirited conduct of our yacht sailors, and especially of the Royal Yacht squadron. Their 92 vessels, of 9400 tons, and manned by 1200 picked seamen, do honour to the country. Nor need their owners be discouraged because a faster vessel has been found. Let them remember that the race was anything but a match; the drawing now lying on the table of the lines of the *America*, in accordance, I believe, with the wave-line principle, shows that the displacement of that vessel to the load-line, or the amount that had to be driven through the water, was not more than two-thirds of that of her opponents in general; while the distance between her timbers was 30 inches, and that of her competitors was barely 10 inches. One was a mere shell built solely for racing, the other constructed for the accommodation of a party on a yacht voyage up the

Mediterranean: in short, a race-horse matched against a well-fed carriage-horse.

Steam Vessels.

Probably no part of Class VIII. of the Exhibition will be regarded with more interest than that which illustrates the early, progressive, and present application of the steam-engine to navigation. The honour of having first imagined a vessel to be propelled by steam would seem to belong to Blasco de Garay, a Spaniard; and his plan was tried as early as the year 1543, by order of the Emperor Charles V., at Barcelona, on a vessel of 200 tons, which was propelled at the rate of three miles an hour. This experiment would appear to have fallen into oblivion. In 1736, Jonathan Hulls, in England, patented a plan for propelling with paddle-wheels; in 1789, Symington propelled a vessel on the Forth and Clyde Canal at the rate of nearly seven miles an hour; and again, in 1802, satisfactorily worked a steam-tug on the same canal; but it is to the undaunted perseverance of Robert Fulton, an American, that the honour is due of having carried the measure into practical execution; and in August 1807, he made his first passage from New York to Albany in the *Clermont*, of 20-horse power, at an average speed of five miles an hour. In April 1812, Henry Bell, of Helensburgh, established a steam-vessel in the Clyde, and steamed between that place and Glasgow, also at the rate of five miles an hour.

In 1818, a steam-ship crossed the Atlantic from

Savannah to Liverpool; in 1838, just twenty years later, the *Sirius* and *Great Western* made their first voyage to New York; and now, as it is well known, steam-ships of 2000 tons burden and 500 horse-power are navigating the Pacific and Indian Oceans; and they weekly cross the Atlantic at the average rate of ten miles an hour, whatever be the wind or weather; while American river steamers navigate the Hudson at the rate of twenty, if not twenty-two miles an hour.

As a paddle-wheel war-steamer I would direct attention to the model of the *Terrible*, of 1850 tons, and 800 horse-power, designed by Mr. Oliver Lang, of Woolwich Dockyard, which has proved herself one of the most efficient in the navy. He, too, was the builder of the *Comet*, of 238 tons, and 80 horse-power, in the year 1822, the first steamer built in a Government dockyard.

The most successful effort at producing fast sea-going paddle-wheel steamers has resulted from the free competition permitted for the four mail steamers between Holyhead and Kingston, a distance of 56 nautic or 64½ statute miles, which was accomplished by the *Banshee*, built by Mr. Oliver Lang, Jun., engines by Penn, in $3^h\ 26^m$, or at the rate of 16·32 knots, or 18·8 statute miles an hour; the average time of passage being $4^h\ 3^m$, equal to 13·84 knots, or 16 miles an hour for summer and winter. All the four vessels have earned a very high character. A striking example of the value of free competition, and of the builder and engineer working in concert, and both doing their utmost to maintain their high character.

Screw Steamers.

Taking, however, the best of our paddle-wheel war steamers, and admitting all the improvements that have from time to time been introduced, the fact of the small amount of armament that they carry relatively to the burthen of the vessel and the power of the machinery, forcibly claims attention. Latterly the *Odin*, *Sidon*, *Terrible*, and *Retribution*, have been constructed to carry broadside guns, but their wheels and part of their machinery must necessarily remain exposed to shot; this is an inherent defect in principle in paddle-wheel steamers, which no skill of the builder can overcome. We are driven, therefore, to seek some other mode of propulsion. This, happily, has been found in the screw; and, perhaps, in the whole range of experiments connected with the application of steam to ships, there is no point of greater interest than the gradual progress and ultimate triumph of the screw-propeller.

The immense advantage of a submerged propeller over the paddle-wheel, as an auxiliary to sailing-vessels, in point of economy, in protection from shot, and as leaving the broadside of a ship-of-war free for guns, renders any sacrifice of time and expense to accomplish the object in the best manner well worthy of the nation.

Passing over the early history of this application of the screw, we come to the patent taken out by Mr. Francis Smith in May 1836, and that by Captain Erricssen in July following. The former made his first trial in the *Archimedes*, on the 20th September, 1837, which at once established the practicability of this propeller. In 1845, a trial of

the relative merits of the paddle-wheel and screw took place between similar vessels, the *Rattler* and *Alecto*, of 888 tons and 200 horse-power, when, with the two vessels lashed stern to stern, the *Rattler*, screw-propeller, towed the *Alecto* astern at the rate of 2½ knots an hour, in spite of all her efforts to the contrary. These experiments appear to have established a superiority for the screw of 17 per cent. Other vessels have since been built in which the screw is used as an auxiliary; and it is understood that the most recent trials made in the squadron of ships lately stationed at Lisbon, fully confirm all that was expected of these vessels. The *Arrogant*, of 360 horse-power, the first screw-frigate introduced into the navy, built by Mr. Fincham, of Portsmouth Dockyard, has established the principle of efficiency and economy. Other important points remain to be decided by means of carefully conducted experiments, among which may be noted, —1st. On the best form of a screw-steamer, so as to overcome the resistance of the water, and to contribute most effectually to a good result of the screw. 2d. The exact relation of horse-power to tonnage that is requisite. 3d. The relation of the length to the pitch of the screw, which seems to be a point of considerable importance; and, lastly, the area of sail that is most suitable. The models sent to the Exhibition of the *St. Jean d'Acre*, of 100 guns, the *Agamemnon* of 90 guns, and the *Impérieuse*, of 50 guns, besides various others, both naval and mercantile, show the attention that is now directed to this mode of propulsion and the rapid progress it is making.

In the mercantile navy the magnificent ship the *Great Britain*, constructed by the eminent builder, Paterson of Bristol, claims the first place, both as an iron vessel and as a screw-propelled steamer. This noble ship, 317 feet long, with engines of 1200 horse-power, has repeatedly made the voyage across the Atlantic; and now that she has been repaired and strengthened, is again open to start on a similar voyage, in which it may be hoped she may meet with the success that her spirited owners deserve. In a country like England, where iron is so abundant, cheap, and well adapted to various purposes, it was natural to use it instead of wood, and it has been largely substituted for timber in building ships. The advantages of iron vessels, when carefully built, consist, generally, in their durability, strength, capacity for stowage, economy, and salubrity; but iron does not appear to be applicable for ships-of-war.

With respect to economy, it appears that the original cost of paddle-wheel steamers, when fit for sea, is about 5*l.* 9*s.* per ton greater than that of screw steamers, and that their current expenses for the year are about 8*l.* per ton more than those of screw vessels. At the same time the average measure of cargo for screw steamers is three-fourths of a ton for each ton of builders' measure, whilst for paddle-wheel steamers it is less than half a ton, or 33 per cent less than the former. Others state the saving at fully two-thirds the cost of each voyage. The greater economy, therefore, is manifest.

There were no models in the Exhibition, as far as I am aware, of the best mode of drops, or other means of

coaling steamers; yet this is a point of great importance, especially in our war-steamers. At present, the operation for a large steamer is an affair of three or four days; thus one of those beautiful, costly vessels, with all her equipment, is for that period enveloped in a cloud of coal-dust; besides the delay in case of need. Coals in the North of England are "teemed" into collier vessels at the rate of 120 tons an hour, when run down by rail from the coalpit; and at Newport and Cardiff, and the coal ports in South Wales, coals are shipped by steam, or by the use of Armstrong's beautiful hydraulic lift, at the rate of sixty tons an hour. Might not something of the sort be contrived in our Government ports?

I feel that I am travelling out of Class VIII., but I cannot forbear to allude to the exquisite models of marine oscillating engines exhibited by two of our first English makers, Maudslay and Penn; the full-sized screw-propeller marine engines, of 700 horse-power, by James Watt and Co., which exceeded 100 tons in weight; and a smaller pair, of seventy horse-power, by Cockerell, of Liege. The progress of science happily has broken through the old-established rules respecting the speed at which the pistons of condensing steam-engines should move; and it may be hoped that ere long our marine-engines may approximate somewhat to the locomotives. At present the contrast is great, as even with direct-action and tubular boilers we only get a power of about four horses for each ton weight of engine; whereas some of the largest locomotives exceed a power of thirty horses for each ton weight. Of course there are many circumstances to be considered,

but they can hardly justify so great a difference as is found to exist.

In calmly considering the various beautiful models sent to the Exhibition, and especially those of the Experimental Squadrons, the philosophical mind would naturally inquire whether the costly experiments these models indicate have been conducted on scientific principles, and whether any analysis of the numerous reports of the trials which have lately taken place have been made, so that the full measure of truth, which, if properly conducted, they are calculated to elicit, has been obtained.

To both these questions we fear we must reply in the negative. The trials have, in many cases, been loosely made; several vessels and several points in each vessel have been tried together; the builder of the vessel or a qualified naval architect has not been on board to watch and register the several points which he alone could be competent to judge of; nor is there any complete register of the several facts brought out on the trials, such as would be useful to a ship-builder.

Taking, however, the reports that have been made *quantum valeant*, have the facts contained in these reports been compared, analyzed, and submitted to a comprehensive generalization? As far as we are aware, it is not the special duty of any persons, or even of any individual, to undertake such a task. It would naturally fall to the lot of the surveyor's office, but the staff of that office, however competent, is quite inadequate to the work; the daily routine of office business, in attending to the wants of ships

building, repairing, and in commission, is already more than it can grapple with.

The consideration of the models of marine engines, and of their application to the screw-propeller, suggests similar inquiries, and the very great cost of these engines renders the necessity of such comparison and analysis even yet more imperative. Some of the recent trials of the screw-steamers, and especially in the Lisbon squadron, appear to have been conducted with great care, and the results are proportionably valuable. The same may be said of a table printed by the Admiralty, showing the introduction and progressive increase of screw propulsion in her Majesty's navy, which is extremely interesting and instructive. But this table, valuable as it is, and highly creditable as it is to the industry of those who compiled it, only affords the elements of the analysis and comparison that I contend for. What information it may convey to a professional engineer I am no judge of, but to a casual observer it is difficult to reconcile the performance of the several engines as shown by their indicated horse-power. As for "nominal" horse-power, it only serves to mystify, and the sooner the term is exploded the better. The average results of this table show that indicated horse-power is nearly double the nominal; but in the case of the *Fairy* it is fully treble, and it is understood that in the *Banshee*, paddle-wheel steamer, before referred to, and the *Vivid*, the indicated horse-power is about five times, and in the *Onyx*, *Violet*, &c. four times the nominal. The *Llewellyn*, Holyhead packet of 654 tons, and 350 nominal horse-power, and the *Terrible* of 1850 tons, and

800 nominal horse-power, both worked up to the same mark of 1800 as the indicated horse-power! If nominal horse-power means the same in paddle-wheel and screw-steamers (which I believe it does not), why these great differences? The question of cost I do not enter into. The above casual remarks may illustrate the desirableness of a careful register of all experiments and an equally careful analysis and comparison of all results obtained. Surely there cannot be a want of men of talent to undertake this task. But will the country avail itself of this talent?

Classification.

During nearly thirty years the formation of a steam navy has been changing the character of England's defences. The Great Exhibition plainly teaches us that hitherto nearly all has been experimental; we have been in a state of transition. But surely the time has now arrived when it would seem incumbent on our rulers to form a system of classification with reference to particular descriptions of service, having respect to the general dimensions of ships, the proportion of steam power to those dimensions and the amount of armament.

Perhaps never did the value of classification come out into such striking relief as in the Great Exhibition. What a Babel of confusion would not that vast building have been without a happily devised system of classification; but by its aid chaos became order. We are told* that

* See "Inaugural Lecture," by Dr. Whewell, p. 27.

millwrights have classified toothed wheels, and that an eminent engineer would classify screws, wheels, axles, &c. If, then, for such small articles its value is recognised, how much more necessary does classification become when applied to such vast machines as steam-ships and their engines? I am afraid to say what number of different engines we may have among the 200 steamers of which our navy is composed; but, perhaps, to assert that each ship has its own peculiar arrangement would not be far from the truth.

Classification, too, should be extended to our sailing vessels. Would any one not acquainted with our navy credit that, to speak within bounds, there are thirty classes of vessels between a first-rate and a brig? Within the last ten years we have launched six classes of brigs alone. Now each of these thirty classes of vessels requires masts, spars, sails, and stores of all sorts, the consequent waste, and the difficulty of supplying wants on a foreign station, may be imagined. But classification of marine engines and of all their parts seems more imperatively called for, and *at once*, or the complication that a few years will produce is not to be told. Mr. Atherton has strongly urged the importance of this subject; he advises that the respective fleets employed in steam-shipping establishments be constructed on a definite plan of general arrangements, and that the variations of power be regulated by a definite scale of sizes constituting a classification system. It is probable that six or at most eight classes would be ample for the purposes required.

Armaments.

It might seem "the play of Hamlet, without the part of Hamlet," to speak of ships-of-war without mentioning their armaments, were it not that I consider all warlike weapons would have been better excluded from the Exhibition, which was essentially a peaceful gathering, and specially intended by its royal founder to knit all nations together in the bonds of peace and concord. I may, however, briefly state that, for a long series of years, nay, centuries, we contrived to over-load our ships with more guns than their limited dimensions and crowded quarters would bear. We placed 12, 18, 24, and 32-pounders together in the same ship, risking admirable confusion in handing up cartridge and shot in time of action; and as a crowning measure we armed some of our vessels entirely with carronades; so that an opponent's ship, armed with long guns, and having the advantage of speed, could take up her position and destroy her adversary without receiving a shot in return.

Happily those times are past. Our ships now carry long 32-pounders throughout on all their decks, except a stray 68-pounder, reserved for some special occasion: the gun-carriages are better fitted, and adapted to the stern and chase ports of a ship, so that several guns can be fired in the line of keel. The powder is preserved from damp in wood cases with metallic linings; and the magazines are more commodiously placed. These latter, however, are still susceptible of improvement. The separate passages adopted in the French navy for the con-

veyance of cartridges from the magazines up to the several decks or batteries of a line-of-battle ship, might probably be studied with advantage.

But my space is exhausted; I can only regret that the maritime nations of the Continent did not send to the Exhibition specimens of their naval architecture. The Swedish ship-builders, inheritors of the science and art of the celebrated Chapman, author of the *Architectura Navalis Mercatoria*, would have figured honourably, even in comparison with the most advanced seafaring people. Nor have the French builders of Hâvre, Nantes, Bordeaux, and Marseille, contributed to the Exhibition. From France came only a design of the great iron steamer built for the navigation of the Rhone, the most rapid and dangerous of the French rivers, by Schneider, of Creuzot, who, during the last twelve years, has built eighteen steamers, varying from 80 to 300 horse-power for that traffic.

Nor have I time to do more than mention Sir William Snow Harris's admirable lightning-conductor—an example of the practical use that abstract science may be to our navy and to the cause of humanity—an invention that deservedly received a Council medal. Also the chain cables of Sir Samuel Brown; the anchors by Porter and Rodger; Robertson's excellent Manilla rope; Erricssen's sounding-machine; the Admiralty's admirable steering and azimuth compasses; Dent's excellent steering and portable azimuth compasses; Napier's magnetic course indicator; and the Satellite compass, by St. John of Buffalo, intended to point out and measure, the effect upon the needle of any distributing force or local attrac-

tion,—a plan which, if well worked out, might prove valuable on board iron vessels.

Nor, albeit I may lay myself open to Molière's witty remark, "*Vous êtes orfèvre, Monsieur Josse,*" can I deny myself the gratification of referring to the admirable charts of the coast of France published by the *Depôt de la Marine* under the superintendence of that veteran surveyor, M. Beautems Beaupré, which compose the superb atlas *Le Neptune Français;* and to the far more voluminous charts and plans of the Hydrographic Office of the Admiralty, not only of our own coasts, but of nearly every country on the face of the globe, prepared under the direction of our own respected chief, Rear Admiral Sir Francis Beaufort, in which is shown what science can do—when science is allowed to prevail—in furnishing the navigator with a guide that enables him to pursue with confidence his path along the shores or across the trackless ocean.

Fishing-boats.

Fishing-boats, however, must have one word. The value of the fisheries in this country, and the means they afford of supplying the poor with cheap and nutritious food, is too important not to claim notice. Cornwall contributed to the Exhibition a model of her Mevagissey and St. Ive's drift-boats for taking pilchards, with their nets and gear; and Semmens and Co., of Penzance, sent a fine Mount's Bay fishing-boat—a class of boats which have not their superior round the coasts of England. On the

drawing exhibited this evening are the l
approved fishing-boats all round the coa
Kingdom, not one of which surpasses th
boat. There were also at the Exhibitio
Hastings, Deal, and Ramsgate luggers, a
and a Peterhead herring-boat, and, thoug
the model of a fishing-smack of Mr. J. E.
with an auxiliary screw-propeller, which
tained a medal; the smack is now fishing
the Dogger Bank, runs her fish to Grimsby
and thence by rail to London, where the
within twenty-four hours of its being caug
of the North Sea. When we consider t
boats of the United Kingdom in 1850 amo
boats, manned by 150,000 men and boys, it
that this class of men deserves some con
all that can be done towards improving th
giving them moderate speed, easy motion
and comfort for the crew, capacity for
cargo, and safety in taking the beach, s
and that as far as may be their small har
deepened, to enable them to obtain shelter
and at all states of the tide.

I turn to life-boats—the only point
pretend to a little knowledge—and have
extreme regret, that the large subject of
is the business of a professed Naval Archit
been left to a sailor to treat upon.

ECK CHART
OF THE
TISH ISLES
FOR 1850,
ING ALSO THE PRESENT
FE-BOAT STATIONS.

lack dot around the coast represents a wreck.
land represents a life boat. ✦ total wreck.

hole of the wrecks of British vessels were 692.
f British and Foreign vessels on the coasts and
f the United Kingdom were 681. Of these 277
reks; sunk by leaks or collisions 84; stranded &
as to require to discharge cargo 304; abandoned
wrecks &c. 681. Total lives lost 784.

re are 80 life boats in England.
- 8 - - - Scotland.
- 8 - - - Ireland.
me half of the boats are unserviceable.

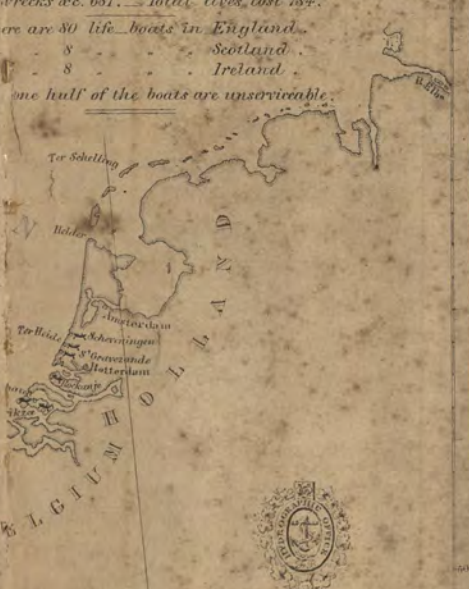

Engraved on stone by A. Freeman 5 Compton St. North

NORTH SEA
ENGLISH CHANNEL
IRISH SEA
BRISTOL CHANNEL
MORAY FIRTH
FORTH
SOLWAY FIRTH
LONDON
MANCHESTER
LIVERPOOL
GLASGOW
EDINBURGH
DUBLIN
Yorke
Lancaster
Chester
Bristol
Hull
Plymouth
Portsmouth
Southampton
Dover
Harwich
Yarmouth
Aberdeen
Dundee
Perth
Inverness
Carlisle
Newcastle
Sunderland
Scarborough
Whitby
Liverpool
Holyhead
Milford Haven
Cardiff
Swansea
Falmouth
Penzance
Scilly Isles
Isle of Wight
Portland
Weymouth
Exeter
Torbay
Start Pt.
Lizard Pt.
Land's End
Hook Pt.
Tuskar
Wicklow
Dublin
Dundalk
Drogheda
Belfast
Donaghadee
Portaferry
Strangford
Carrickfergus
Larne
Glenarm
Ballycastle
Portrush
Londonderry
Lough Foyle
Malin Head
Tory I.
Rathlin I.
Ailsa Craig
Girvan
Ayre
Irvine
Greenock
Dumbarton
Port Glasgow
Paisley
Renfrew
Dumbarton
Helensburgh
Gourock
Rothesay
Campbeltown
Ardrossan
Saltcoats
Troon
Stranraer
Portpatrick
Whithorn
Wigtown
Kirkcudbright
Dumfries
Annan
Workington
Whitehaven
Maryport
Barrow
Ulverston
Fleetwood
Preston
Southport
Formby
Morecambe
Barnard Castle
Durham
Stockton
Hartlepool
Seaham
Sunderland
Shields
Tynemouth
Blyth
Berwick
Holy Island
Eyemouth
Dunbar
North Berwick
Musselburgh
Leith
Burntisland
Kirkcaldy
Kinghorn
Queensferry
Stirling
Alloa
Culross
Dunfermline
Inverkeithing
Queensferry
Leven
Elie
Anstruther
Crail
Fife Ness
St Andrews Bay
Tayport
Broughty Ferry
Arbroath
Montrose
Stonehaven
Peterhead
Fraserburgh
Banff
Portsoy
Buckie
Findhorn
Nairn
Fort George
Fort William
Tarbet Ness
Dunnet Hd
Thurso
Wick
Noss Hd
Helmsdale
Golspie
Tarbet Ness
Cromarty
Chanonry Ness
Kessock
Inverness
Lochaber
Corpach
Ballachulish
Oban
Tobermory
Mull of Kintyre
Islay
Jura
Colonsay
Skerryvore
Tiree
Coll
Barra Head
Mingulay
Pabbay
Berneray
Harris
Lewis
Stornoway
Loch Maddy
Benbecula
North Uist
Barra
Vatersay
Eriskay
South Uist
Loch Boisdale
Loch Skiport
Loch Eynort
Loch Roag
Loch Seaforth
Loch Erisort
Loch Resort
Loch Snizort
Loch Dunvegan
Loch Bracadale
Loch Harport
Loch Scavaig
Loch Coruisk
Loch Slapin
Loch Eishort
Loch Alsh
Loch Carron
Loch Torridon
Loch Ewe
Loch Gairloch
Loch Broom
Loch Inver
Loch Laxford
Loch Eriboll
Kyle of Tongue
Loch Hope
Loch Naver
Loch Shin
Loch Fleet
Dornoch Firth
Tain
Cromarty
Invergordon
Alness
Dingwall
Fortrose
Fort Augustus
Loch Ness
Loch Lochy
Loch Linnhe
Loch Leven
Loch Etive
Loch Fyne
Loch Long
Loch Goil
Loch Striven
Loch Ryan
Loch Indaal
Loch Gruinart
Loch Tarbert
Loch Sween
Loch Crinan
Loch Awe
Loch Melfort
Loch Feochan
Loch Creran
Loch Etive
Loch Leven
Loch Linnhe
Loch Sunart
Loch Aline
Loch Moidart
Loch Nevis
Loch Hourn
Loch Duich
Loch Long

LIFE-BOATS.

At the extreme western end of the gallery of that mighty building replete with objects, either the produce of our own country or of foreign lands, which contributed to make up the glorious *ensemble* of the Great Exhibition of the Art and Industry of all Nations, might have been seen by the attentive observer, amongst other kindred specimens, a group of models of boats of a peculiar and unusual form. These boats were models of life-boats. And however rich in the treasures and wonders of art, the Exhibition without them would not have faithfully represented this country, inasmuch as it would have omitted one striking national feature of our land—the efforts made in the cause of humanity.

It will, doubtless, be familiar to all assembled in this hall, that it was to the munificence of his Grace the Duke of Northumberland, President of the National Shipwreck Institution, that we were indebted for that collection. In consequence of the numerous cases of shipwreck, and the accidents that had happened to life-boats around the coasts, and especially the recent lamentable case of the upsetting of the Shields life-boat, whereby twenty of the best pilots out of the Tyne were drowned, his Grace offered a reward for the best model of a life-boat. This offer was liberally responded to by boat-builders and others from all parts of this kingdom, and from France, Holland, Germany, and the United States of America, and the large number of 280 models and plans were sent in. Some fifty of the

best of these formed the Duke's contribution to the Great Exhibition.

A report on these models, accompanied by plans and drawings of the most approved of them, was prepared at the expense of his Grace, and 1300 copies of it gratuitously distributed, not only throughout the length and breadth of our island, but to all the maritime nations of Europe and the United States of America; in addition to which his Grace publicly expressed his intention of placing the best life-boats that can be built, and every means for saving life from shipwreck, on all the exposed points of the coast of Northumberland.

It would ill become me to pronounce an eulogium on such princely generosity in this sacred cause; but I am permitted to quote the words of the distinguished senator, Baron Charles Dupin, Chairman of the Jury of Class VIII., who, after reciting the above facts, sums up the award of the Jury in the following words:—

"These models figure among the most valuable productions in our Great Exhibition, and furnish a splendid example of liberality, in the cause of humanity and practical science, never surpassed, if ever equalled. Such are the motives for which we have judged his Grace the Duke of Northumberland worthy of receiving the Council medal."

Such, then, being the importance attached to these models by the unanimous decision of a Jury composed of distinguished men of all nations, and the object being the

cause of humanity, I propose, as briefly as I possibly can, to lay before you :—

1st. The frightful amount of shipwreck and loss of life that annually takes place around our coasts, showing the necessity for life-boats.

2dly. To pass in review the peculiar features of the principal models sent to the Exhibition, and to offer an opinion on the essential qualities of a good life-boat, as to form, dimensions, material, &c.

3dly. To show the present meagre supply of boats and other means of saving life around the seaboard of the United Kingdom; and

Lastly. To offer some suggestions as to the best means of diminishing the frequency of shipwreck, and of saving the lives of those who unfortunately may be exposed to it.

If there be one subject more than another that might be expected to command the attention and enlist the sympathy of a maritime country like Great Britain, it surely must be the safety and welfare of those of her sons "whose business is in the great waters," and yet how imperfectly informed, how supinely indifferent, is the great bulk of our population as to the causes, the prevention, or the mitigation of the horrors of shipwreck!

From official returns it appears, that in the course of the year 1850 there were 692 vessels, of 127,188 tons burthen, wrecked belonging to the United Kingdom, or nearly two a-day. Of these, only four were steamers. By a reference to the annexed Wreck Chart, for the year 1850 alone, it will be seen that 681 British and foreign vessels

were wrecked on the coasts and within the seas of the British Isles. Of these vessels, 367 were total wrecks, sunk by leaks or collisions, or abandoned; and 304 were stranded and damaged so as to require them to discharge cargo; making a total of 681 wrecks. As nearly as can be ascertained, 780 lives were lost. However large it may appear, this is not any very unusual number, a similar amount is annually lost, leaving a proportionate number of widows and orphans.

It is not an uncommon occurrence for a single gale of wind to strew the coast with wrecks. In three separate gales which occurred in the years 1821, 1824, and 1829, there were lost on the east coast of England, between the Humber and the Tees, 169 vessels. In the single gale of the 31st August and 1st September, 1833, no less than 61 British vessels were lost on the sands in the North Sea and on the east coast of England. In the disastrous gale of the 13th January, 1843, 103 vessels were wrecked on the coasts of the United Kingdom. In the gales of 1846 as many as 39 vessels got ashore in Hartlepool Bay alone. In the month of March 1850, not less than 134 vessels were wrecked on our own coasts. In the gale of the 25th and 26th September last, not less than 117 vessels, and in the whole month 153, were stranded, came into collision, or sunk within the seas and along the shores of the United Kingdom, or more than five a-day; and during the month of January of the present year, 120 vessels more have been added to the number. These instances, many of which happen to have been made public by being laid before Parliament, are only a few out of the number that might be

cited, and even these probably fall short of the real numbers. No complete record of shipwrecks is kept; Lloyd's List, however full, is confessedly imperfect. But the facts quoted are sufficient to prove an appalling amount of loss of life, and the absolute necessity that exists for establishing around our coasts the most perfect means in our power for the preservation of life from shipwreck. Of these means the most important is the life-boat.

The first life-boat used in England was invented by Henry Greathead, boat-builder of South Shields, in 1789, in consequence of the wreck of the *Adventure* on the Herd Sand at the entrance of the Tyne. As the first boat of the sort, the original model of which, on the scale of one inch to a foot, now lies on the table, it may be as well to record her exact dimensions. They are as follows:—Length extreme, 30 feet; length of keel, 20 feet; breadth of beam, 10 feet; depth of waist, $3\frac{1}{4}$ feet; depth inside to the deck, $2\frac{1}{3}$ feet; stem and stern alike, $5\frac{3}{4}$ feet high; sheer of gunwale, 30 inches; pulls ten oars, double-banked with tholepins and grummets. Very raking stem and sternpost; depth of main keel, 4 inches; great camber or curvature of keel, with three sliding keels. A cork lining 12 inches thick on each side, fore and aft, from the deck to the thwarts; and a cork fender outside, 16 inches deep, 4 inches wide, and 21 feet long, not reaching to stem or stern within $4\frac{1}{2}$ feet. She would not free herself of water, nor self-right in the event of being upset. This boat was built by subscription at South Shields, and launched in January 1790. The Society of Arts rewarded the inventor

with its Gold Medal and fifty guineas in the year 1802;* and Parliament voted to him 1200*l.* in acknowledgment of the utility of his invention.

From that period, now sixty years ago, to the present time, various modifications of the above boat have been built. Some have introduced air-tight cases instead of cork, some water ballast, &c.; but reserving for the present any remark on them, we come at once to the Northumberland prize-model by James Beeching, of Great Yarmouth, which was sent to the Great Exhibition.

It may be seen from the model of that boat [illegible] on the table that, from her form, she would both [illegible] well in all weathers: would have great stability, [illegible] a good sea-boat; she has moderately small interna[illegible] under the level of the thwarts for holding water, and ample means for freeing herself readily of any water that might be shipped; she is ballasted by means of water admitted into a well or tank at the bottom after she is afloat, and by means of that ballast and raised air-cases at the extremities, she would right herself in the event of being upset. It will thus be seen that this model combines most of the qualities required in a life-boat; and the boat which has since been built after it, and is now stationed at Ramsgate, is said to answer her purpose admirably.

Many others of the models sent to the Exhibition have somewhat similar good features. Hinks, of Appledore, to whom a medal was awarded, has greatly reduced the internal capacity of his boat, which gives him precedence over some otherwise equally good forms. Plenty, of New-

* "Transactions of the Society of Arts," vol. xx. p. 2[illegible]

bury, also a medallist, has done the same; he has also shown much skill in the mode of applying cork to the bottom of his boat. Two small boats by this builder, one at Appledore, Devon, and the other at Skegness, in Lincolnshire, have been instrumental in saving 120 lives. Harvey and Son, of Ipswich, contribute a fine sailing-boat, which has the property of ballasting with water. The model of Forrest and Laurie, also, has some good points, and takes a fair stand. Teasdel, of Great Yarmouth, another well-deserved medal, is well known as having built several fine boats stationed at Caistor, Pakefield, and Southwold, on the coasts of Norfolk and Suffolk, which have been the means of saving seventy-two lives. One excellent feature in his boats is the use of air-cases detached from the side, so that they can be examined and repaired at any time. In point of workmanship and finish, Teasdel's models were not surpassed by any sent to the Exhibition.

Costain, of Liverpool, is also entitled to credit for his detached air-cases, in the form of breakers or small barrels, secured to the side; and for his diagonal mode of building. His boat, from its form, would pull and sail fairly, and have good stability; but it has large internal capacity, no means of freeing itself from water that may be shipped, and would not right in the event of being upset. At the same time it must be remarked that there are nine boats (built on this model, we believe) stationed at Liverpool; there are also boats designed by him at Carnarvon, at Anglesea, and Shoreham. The Liverpool life-boats, supported by the Dock Trustees, and under the superintendence of

Lieut. Lord, R.N., have been the means of assisting 269 vessels, and saving 1128 lives during the last eleven years, so that the boats must be fine sea-boats, and, in addition (which has no doubt a great deal to do with it), must be efficiently manned and well managed.

Bromley, of Sheerness, has ingeniously filled in the interior of his boat, from the keelson to the flat, with cork and air quartered alternately, thus reducing his internal capacity by a combination of ballast and buoyancy. Lieutenant Sharpe, R.N., proposes to fill the whole of his boat below the thwarts (excepting spaces for the rowers) with cork, so arranged that he can remove pieces of it to make room for passengers, when required. Hodgson, of Blyth, and Arrowsmith, of Portsmouth, also fit their boats with cork, so distributed as to greatly reduce internal capacity, and yet to leave ample space for passengers. Unquestionably the use of cork is preferable to air-cases as being less subject to injury, and there seems reason to believe that the lightest fishermen's cork is sufficiently light to be used for the greater part under the deck instead of air-cases for reducing the internal capacity, and at the same time heavy enough to act as ballast instead of water.

The late Commodore Lord John Hay, C.B., Superintendent of Her Majesty's Dockyard at Devonport, sent the model of a life-boat, which now lies on the table. It will be seen that this boat would pull moderately well and sail fairly, would free herself from water, would right herself quickly in the event of being upset, but is rather wanting in stability. The boat is of a peculiar mode of practical building, being constructed of narrow planks, pinned

together through the edges, without timbers. It is said to be both durable and economical.

Mr. Turner, Assistant Master Shipwright at Devonport, also submitted the model of a boat which he proposes as a Coast Guard safety-galley. Such a boat would pull fast, would free herself of water, would right herself in the event of being upset, but seems wanting in stability. The former of these are valuable points in a boat to be employed in a service so exposed to bad weather as that of the Coast Guard, and a boat of this description, with sufficient stability, would be of great use in the Revenue service.

The group of life-boats generally, from Shields, the Tyne, Sunderland, and others from Hartlepool and Whitby, may be considered as having for its type a flat-bottomed troop-boat, or steamer's paddle-box boat. The model of Farrow, of South Shields, which gained the first premium in a life-boat model competition at South Shields in 1842, and again at Newcastle in 1850, is perhaps a fair specimen of this class. It has small internal capacity, a moderate proportion of delivering area (although not enough), water ballast in the bottom to be admitted when afloat, raised air-cases in the bow and stern-sheets, clear access to the extremities, ample room for carrying passengers, and she might right herself in the event of being upset, all of which are good qualities. With respect to the form of this class of boats, its advantages, beyond great stability, are not easy to be discovered; if the life-boats were towed out to the site of the wreck by a steam-tug, as at Liverpool (and which, in a port like Shields, abounding with steam-

tugs, might have been expected), it would be easier to understand it; but for a boat that has to pull out of a river, and often against a strong wind and tide, it is difficult to comprehend why such a form as that given to the Yarmouth boat, No. 1, should not be preferred. It must, however, be borne in mind that the boats stationed at North and South Shields have done good service, and been instrumental in saving hundreds of lives.

Lee, of Tweedmouth, Milburn, of Blyth, and Edmond, of Scarborough, have sent life-boats after the model of the north-country coble. The good qualities of the coble on the coasts of Northumberland, Durham, and Yorkshire, when employed as a pilot-boat, or a fishing-boat, and in shallow water, and for landing on, or embarking from, a flat beach in not very stormy weather, are too well known to require remark; but it is doubted whether the form is applicable for the general purposes of a life-boat, either on a flat coast or on any other. The low square stern and want of keel on the after body will not admit of running the boat before the wind when blowing hard; and in proof, it may be stated, that in an accident at Newbiggin, in March 1851, when fourteen lives were lost, some of the cobles went down by the stern, and the very fishermen who invariably use the coble for their own purposes, have expressed a wish to have a life-boat of a whale-boat form.

Another class of boats, offering in form a strong contrast to the Shields boats before-mentioned, require notice, as they seem to be intended by their builders for contending with rapid tides and smoother water, rather than the ordinary heavy open sea to which life-boats

are commonly exposed. Their breadth is about one-fourth their length. The models of Messrs. White, the well-known builders at Cowes; of Tredwen, of Padstow; of Semmens and Thomas, of Penzance; of Lieut. Sharpe, R.N., of Hanwell Park; of Sparke, of Exeter; and of Bromley, of Sheerness, belong to this group. As a rowing-boat in moderate weather, a boat after the model of the Messrs. White would distance most of those sent to the Exhibition; and it is known that in very heavy weather such a boat has been the means of saving life. The boat of Mr. George Palmer, of Nazing Park, Essex, is also of this class. It claims attention as being the model which has hitherto been generally adopted by the National Shipwreck Institution; and several similar boats are placed around the coasts, as at the Isle of Anglesey, and elsewhere.

Among other models was one by Mr. Willem Van Houten, of Rotterdam, President of the South Holland Shipwreck Institution, being that of the life-boat in use in Holland, where six boats are stationed in the neighbourhood of the entrance to Rotterdam. This boat has a flat bottom, to suit it to the nature of the coast; it is said to have been the means of saving many lives. M. Ed. Lahure, of Havre, to whom the Jury awarded a medal, sent a full-sized boat, such as is in use at that port; it is of iron, with a very rising floor. It is said to right itself in the event of being upset, and to have been the means of saving several lives. Francis, of New York, also sent a model of what is termed the "life surf-boat," which has the peculiarity of being made of corrugated galvanised iron. From experiments that have been made on this.

boat, it appears unsuitable, under its present form, for the general purposes of a life-boat on any part of the coast of this country. We learn from the printed testimonials which accompany this model, that the Government in the United States have established life-boat stations along the coast of New Jersey at every ten miles apart, at a cost, for the whole, of 2000*l*.

We may here add that there are life-boats in France stationed at Havre, Boulogne, and Calais; in Belgium, at Dunkirk and Ostend; in Holland, at Zierikzee, Brouwershauen, Rockanje, Grave'sande, Ter Heide, and Scheveningen, or three on each side of the entrance of the river leading to Rotterdam, within a distance of twenty miles on either side. There are also, it is said, eleven life-boats stationed on the east coast of Jutland, at the expense of the Danish Government, but we have not been able to ascertain the names of the stations; and some on the coast of Prussia, on the shores of the Baltic. We regret that we are not able, either, to name where these are placed; but we well know that the inhabitants of the Island of Rügen are famed for their hospitality and kindness to shipwrecked sailors, and we believe that there are some ancient humane laws still in force respecting wrecks, which are immediately taken charge of by Government officers, and thus those disgraceful scenes formerly of common occurrence nearer home are entirely prevented.

In several of the models it is proposed to use paddle-wheels, and in some a screw, as a propeller, to be worked by cranks. Bremner, of Wick, places his paddle-wheels within what may be considered a double boat. Remington,

of Warkworth, boldly proposes the use of steam, and Coryton of atmospheric air, as a moving power. The time may come when steam may be so under control as to be made directly applicable to a life-boat (and in the form of a steam-tug it is already of great use, and might be much more used with advantage), but for the present we do not feel that we should be warranted in recommending any other propeller than oars. With respect to manual labour applied to cranks for moving paddles, no proof has yet been adduced that sufficient power or speed can be obtained by means of it; paddle-wheels would fail also in turning the boat quickly, or in a short space.

The group of models representing pontoons, rafts, or catamarans, comprises a numerous body. Russell and Oswald, of Douglas, Isle of Man; Dockar, of Banff; the Hon. and Rev. A. Perceval, of Bookham; Gale of Hull, and others, have shown ingenuity in their models, but they cannot be made applicable to the purposes of a life-boat when required to pull off a lee shore in a gale of wind. Catamarans are much used at Bahia, and at other places on the coast of Brazil, and it is known that they remain at sea in stormy weather; but that is a very different thing from being so much under control as to be enabled to approach a wreck. The real use of a raft is that, at the last extremity, and when all boats are stove, it can be formed out of the spars on board the stranded vessel, and thus afford the crew a means of escape by driving ashore before the wind and sea; and every sailor should make himself familiar with the simple

plans proposed by Captain Bullock, R.N. and others, for readily forming such a raft in time of need.

It is unnecessary to touch further on the peculiar features of the several models sent to the Exhibition, but we must invite your particular attention to a model and drawing of a life-boat, designed by Mr. Peake, assistant master shipwright in Her Majesty's Dockyard at Woolwich, and by permission of the Admiralty, built in that yard, under his superintendence. This boat appears to combine most of the requisite qualities of a life-boat. She has buoyancy, stability, power of self-righting, of freeing herself of water, and capacity for carrying a rescued crew, and there is little doubt but that she will prove an efficient boat.

One concluding remark on this part of the subject we may be allowed to add, namely, the satisfaction that we have derived from witnessing the number of models sent in by men who are earning their daily bread as working shipwrights or boat-builders in the various private and public dockyards in different parts of the kingdom, as it affords additional evidence that many of the working class are thinking men, and it evinces a desire to improve, which is highly creditable to them.

The essential points for a life-boat may be gathered from the few remarks that have been already made in noticing the several boats; but having had the advantage of examining all the different models sent to the Exhibition, it may be useful, in a point of so much importance, to state the conclusions arrived at on the several points of form,

dimensions, material, internal fittings, &c.; and this, I believe, will be in accordance with the suggestions of His Royal Highness that these Lectures should, as far as may be, indicate the path for onward progress rather than refer to special excellencies, or pass in review the varied objects in the Exhibition.

Form.

The form best adapted for the general purposes of a life-boat is that usually given to a whale-boat, that is, both ends alike, but with more breadth of beam; fine lines to enable the boat to pull well, but sufficient fulness forward to give buoyancy for launching through a surf; good cheer of gunwale, say an inch for each foot of length, but rounded off towards the extremes; a long flat floor; sides straight in the fore-and-aft direction; the gunwale strake in the midships to tumble home slightly to protect the thole-pins, and the bow strake to flare out slightly to throw the sea off; as much camber or curvature of keel as can be combined with steady steering, and safe launching from a beach, in order that the boat may be turned quickly to meet a heavy roller when about to break on her broadside.

Dimensions.

In point of length life-boats may be conveniently divided into three classes—from 20 to 25 feet, from 25 to 30 feet, and from 30 to 36 feet; which last may be considered the maximum, and a length rarely required. The smaller-sized boat is handy on those parts of the coast

where it is difficult to find a crew, a difficulty that would be found to extend to a great part of the shores of this kingdom. Such a boat would be easily transported alongshore, easily launched, and readily manned, and, except in some special cases, would generally bring on shore the whole of the crew of a stranded vessel; and as the boat's crew need not consist of more than six men, there would, in case of an accident occurring, be fewer lives perilled. The two boats already alluded to as built by Plenty, one on the coast of Devon, and the other on the coast of Lincolnshire, are respectively 18 and 24-feet boats, and they have saved 120 lives within the last few years.

The medium, or 30-feet boat, to pull ten oars double-banked, is probably the best adapted for the general purposes of a life-boat at all places where a sufficient crew can be readily found to man her. Such boats are in use at Liverpool, Shields, Dundee, and other large ports, where no difficulty is experienced in finding a crew, and on a special occasion, at Liverpool, one is said to have brought on shore 60 persons. At less populous places along the coast a 25-feet boat would be found more easily manageable in point of crew.

The maximum, or 36-feet boat, is adapted for such places as Yarmouth, Lowestoft, Deal, &c., where it is the invariable custom to go off under sail, and where there is never a difficulty in finding beachmen to launch or man the boats, however large. The wrecks at Yarmouth and Deal occur generally on outlying sands, and the boat that happens to be to windward on the coast, according to the direction of the wind, goes off under canvass to the

wreck. Thus, should a wreck occur on the Yarmouth sands in a south-east gale, the Pakefield or Lowestoft boat would push off, while in a north-east gale, the Caistor or Corton boat would put to sea. The boats actually in use at these places are from 40 to 45 feet long; they weigh from four to five tons, and cost from 200*l.* to 250*l.* each. They, therefore, form the exception to the general rule; but they are powerful boats, are admirably manned and handled, and have been the means of saving some 300 lives within the last thirty years.

With respect to breadth of beam, in a rapid tideway, as the Tay, the Humber, the Bristol Channel, the shores of the Isle of Man, the Shannon, &c., a boat somewhat of the galley form, but with ends like a whale-boat, would be more suitable than a wider boat. In these exceptional cases the breadth of beam might be one-fourth the length; but for a life-boat, where the requirements are, roominess for passengers, width to pull double-banked, stability to resist people moving about, and occasionally pressing down on one side in rescuing a man from the water, it should never be less than one-fourth. The Tyne boats have a breadth of fully one-third the length, and some more, but such would not seem to be the best proportions; probably as 1 to 3·8, or 8 feet of beam to a length of 30 feet, would best suit the general purposes of a life-boat.

As to depth, it seems only necessary to observe, that a boat that has to be launched through the surf on a beach should not be too shallow in the waist. The well-known Masulah, or surf-boats, at Madras, have sides 8 feet deep. This height, however, would not suit a boat that has to

pull off a lee-shore against a gale of wind, where the less surface exposed the better. As a general rule, the free-board, or height of gunwale, from the surface of the water, with crew and gear on board, should not be less than from 22 to 24 inches.

The weight suitable to a life-boat does not seem to have received much consideration from our builders, to judge from the difference in existing boats. Those at Holy Island, at Yarmouth, and Southwold, as before mentioned, with their gear, weigh about five tons, whereas many of the models sent to the Exhibition were said to weigh less than half a ton. The mean between these two extremes will be near the truth. For however desirable lightness is for transport along a beach, a certain weight of boat is necessary to resist the force of the waves and to retain momentum, so as not to risk being driven back by the sea; under which consideration 1 cwt. or $1\frac{1}{4}$ cwt. for each foot of length would be a fair general rule. The weight of gear would vary from 5 cwt. to 15 cwt. according as it comprises oars, masts, sails, anchor, cable, warps, &c.

Whatever be the length of the boat, care should be taken that the space between the thwarts should not be less than from 28 to 30 inches, as in pulling in a seaway it is impracticable always to keep stroke; and if the thwarts are too close, the loom of one man's oar is liable to strike the back of the man abaft him. This is a common complaint in life-boats. The oars should be short to pull double-banked, and of fir, as being lighter, more buoyant, and stiffer than ash, which is too pliant. They should

pull with iron thole-pins having rope grummets secured to them, and the pins should be so placed that the boat may be pulled either way, by the men merely turning round on the thwarts.

Materials.

Hitherto all our boats have been of wood, but the testimonials in favour of metal boats are very strong. Galvanized iron (if that process prevents oxidization and the action of sulphur from coal smoke, which does not yet seem to be established) would be the most economical, and the corrugated form of it would give strength. But if metal boats be adopted, copper might be preferred as more durable and more tractable. The boats in which Lieut. Lynch, of the United States navy, descended the rapids of the river Jordan in 1848, were of copper, and that officer reports most favourably of them. It is said that a copper boat is now supplied to every vessel in the United States revenue service, if not to the navy at large. The first cost of such boats would be heavy, but the material would always be of value. In metal boats it is affirmed that the air-tight cases could be more easily built into the boat (if in any case such were admissible), and kept from leaking. About one-tenth of the whole of the models sent to the Exhibition were of iron. I am far from advocating the adoption of metal boats as life-boats, but I would not object to a fair and full trial of them at any convenient opportunity.

In the construction of wood boats, well-seasoned Scotch larch, from its durability and lightness (its specific gravity

being little more than double that of cork), would be found the best material, but neither Polish nor Italian larch should be trusted to. American white cedar is both light and durable. One advantage in having wood boats is, that we should have the benefit of the skill of the numerous boat-builders around the coasts, whereas the building of metal boats is confined to a few hands; and there is an advantage in having a boat built by an experienced man, who designs and executes his own work.

Of gutta-percha, caoutchouc, kamptulicon, and other similar materials, we have no experience that can be relied on. A gutta-percha boat was taken out to the Arctic regions last spring, but the time of trial was too short for any decisive opinion to be formed on its merits. It is stated that the material shrinks, and it certainly will not bear a continued chafe; nor do we know the effect of heat and cold upon it. It is, however, quite possible that some of these materials may prove useful in the internal fittings of a life-boat. A combination of gutta-percha and cork, by Clarkson, of the Strand, and another, consisting of gutta-percha between two layers of thin wood, by Mr. Forster, R.N., may perhaps be well adapted for air-cases. A notion seems prevalent that gutta-percha is very light, but its specific gravity is little less than that of water, or, in other words, it will hardly float. Jeffery's marine glue may also be found useful in the internal fittings of a boat, in joining cork, &c.

Extra Buoyancy.

Extra buoyancy, or that required beyond what the

materials used in the construction of the boat will afford, is the characteristic feature of a life-boat, and as such its nature, amount, and distribution, deserve the most deliberate consideration. If sufficient buoyancy can be obtained by cork, it is far preferable to air-cases, as not being liable to accident. As before-mentioned, there seems reason to believe that a portion of cork may be used under the flat or floor of the boat, so as to reduce the internal capacity, and enable the boat to free herself of water. The only doubt is as to its weight; but cork varies considerably in weight as well as in price; the commonest description of cork, such as used by fishermen as floats for their in-shore nets, does not exceed 12 lbs. weight per cubic foot, and costs about 12*s.* a cwt.; a heavier sort weighs about 15 lbs. per cubic foot. These might be advantageously disposed in the bottom of a boat, covered with gutta-percha, or a light casing, to keep the water out of it, and the boat might then bid defiance to accidents, as thus armed, even if bilged against a rock, she would float.

With respect to air: the great difficulty of rendering vessels permanently air or water-tight, makes them unfit for general use, unless great care and watchfulness be exercised. In those instances in which the air-cases are built into and form part of the boats, it seems doubtful whether any of them can be depended upon for a year; and from various inquiries that have been instituted, there is reason to believe that there does not exist at this moment a complete air or water-tight case (undetached) in any life-boat that has been six months in use around the coasts

of Great Britain. As to air-cases that are detached, they may be better; but unless in the form of small casks, as in the Liverpool boats, there seems sufficient reason to suspect them all. Metal air-cases offer rather a more reasonable prospect of security; but when a life-boat was laid open in Woolwich Dockyard a few years since, it was found that from corrosion there were several holes half an inch in diameter in the copper tubes, supposed to have been air-tight; in fact copper, like other metals, is liable to corrode, and the more so when placed in conjunction with sea-water. The weight, too, of copper tubes makes them objectionable. It has been the practice of Teasdel, an experienced life-boat builder at Great Yarmouth, to build his detached air-cases of thin boards of willow wood, which is both tough and light, and to cover them with painted canvass, and this we believe to be the best; or a sheet of gutta-percha between two thin boards might be adopted, according to Forster's process.

The amount of extra buoyancy may be much less than it has hitherto been customary to give in a life-boat. The cubical contents of the air-cases of many existing life-boats, and of a great part of the models sent to the Exhibition, measure from 200 to 300 feet, equivalent to the support of from six to nine tons of dead weight. Now, if only intended for buoyancy to balance the extra weight likely to be put into a life-boat, this amount is unnecessary. The Liverpool life-boat, already alluded to as having on one occasion brought on shore sixty persons from a wreck, had not above 60 cubic feet of extra buoyancy; this is too

little, but in a 30-feet boat, provided with ample delivering valves, 100 cubic feet, or the equivalent of three tons, is sufficient extra buoyancy for all general purposes.

The distribution of the extra buoyancy requires great care. As a general rule, it should be placed high in the boat, so as not to affect her stability; but circumstances require this rule to be slightly modified. In order to reduce the internal capacity of the boat that she may rise under the weight of a heavy sea that may fall on board, and to enable the delivering valves to act freely, a certain amount of space should be occupied under the flat or floor of the boat, so as to exclude the water; and the question is, so to fill this space with a material of less specific gravity than water, yet sufficiently heavy to ensure the boat's stability when the flat or flooring is laid at from 10 to 12 inches above the keelson, or about the water-line of intended immersion; thus acting generally as ballast, but on emergency as extra buoyancy. From the various plans adopted, this would seem the most difficult problem to solve in the whole arrangements of a life-boat. In some existing life-boats, and in many of the models sent in, reduction of internal capacity is attempted by placing a tight deck fore and aft at from 16 to 18 inches, and even in some at 24 inches, above the keelson, with only air beneath; the result is, that the weights in the boat raise her centre of gravity, and there is a risk of her upsetting when a sea is shipped. Some of the models thus fitted, on being tested as to their stability, went over directly. Other builders, foreseeing this result, added an iron keel to their boats; while some inserted a well or tank amidships for

water ballast, which, as long as it remains in its place, compensates for the amount of air under the flat, and restores the equilibrium. Others have tried a combination of cork and air, alternately distributed, so as to preserve the requisite stability of the boat. But although conceding full merit to water-ballast, which has the advantage of being taken in only when the boat is afloat, and thus leaving her light for transport alongshore, we are of opinion, as before stated, that a portion of cork is better, and that it may be placed in a water-tight case, or in a gutta-percha covering under the deck, up to about 12 inches in height above the keelson, and combine the properties of ballast generally with extra buoyancy in case of need; if above all a light water-tight deck be placed, the cork will be preserved, and very little water will remain to inconvenience the crew or passengers.

The next point to attend to in the distribution of the extra buoyancy is to place the requisite amount of air-vessels in the head and stern-sheets of the boat, from the floor up to gunwale height, in order to give self-righting power, always taking care to leave access to within three and a half or four feet of the stem and stern-post, to enable a man to stand there and receive people from the wreck, as it commonly occurs that a boat cannot go alongside a stranded vessel, but has to receive the rescued men either over the head or stern of the boat. Air-cases should also be placed along the sides of the boat fore and aft, under the thwarts, not for their value as extra buoyancy, but to diminish the internal capacity, and to keep the water that may be shipped away

from the sides of the boat, and to lead it direct to the delivering tubes. In all cases in which air-cases are used, it is recommended that they be not built into the boat, but be detached, so that they may be examined to test if they are water-tight, there being great reason to fear that such is not the case in general, and air-cases built into the sides are liable to open with the working of the boat, or to be stove in going alongside a wreck, as in a recent instance, and thus a boat would be disabled. They should also have valves inserted in them, as sooner or later they are sure to leak; the valves, too, would enable the cases to be aired, and thus preserve them better. Wells' disc valve is the best we have seen for the purpose.

Internal Capacity for Holding Water.

The more the internal capacity is reduced consistently with leaving space for a rescued crew, the better the life-boat. If practicable, the internal capacity for holding water up to the level of the thwarts of a boat thirty feet long should not exceed three tons. It may be diminished by side air-cases from the thwarts to the floor, or by air-cases under the thwarts. On this latter mode of reducing capacity there is a difference of opinion, some contending that it is an advantage to break up a sea, and prevent the water rushing fore and aft the boat, while others think that it is better to let the sea have a fair range, and that then much of the water that comes in over the bows would go out over the stern. The balance seems rather in favour of filling up under the thwarts; it has the certain advantage of reducing capacity.

Means of Freeing the Boat of Water.

In order to efficiency, every life-boat should be provided with the means of freeing herself rapidly of any water she may ship. This would seem a self-evident proposition; but it appears not to be admitted as such by the designers of many of the models, as in them no provision is made for it beyond a bucket for baling. Not to multiply proofs of the necessity for such an arrangement, it is sufficient to cite, as decisive on the point, the recent instance of the Liverpool life-boat, in October 1850, having been obliged to cut her tow-rope, and bear up for the Mersey, in consequence of having shipped a succession of seas. If a boat has large internal capacity, say from six to seven tons, which is not unusual in the Yarmouth boats, and she ships a heavy sea, or a succession of seas, or if, as is commonly the case, while under storm-sails the crew pull out their plugs, and let the boat fill up to her water-line for ballast, should a sudden squall carry away her masts, how is that weight, in addition to the weight of the boat, to be propelled by twelve oars against a heavy sea? it would be impracticable, and the relief of the wrecked vessel must, in such a case, be abandoned.

By means of sufficient delivering-valves or tubes, led through a platform or flat laid a little above the level of the water-line, there seems no reason why the water when shipped should not be carried off rapidly. The area of the valves or tubes should be not less than one square inch for each cubic foot of capacity; more would be better. A question may arise whether it is better that the boat

should free herself by tubes through the bottom, or by scuppers in the sides as shown in several of the models; the former is the more direct and quickest action, but the tubes are liable to be choked in the possible case of a boat grounding on an outlying sand-bank, or on the bar of a river harbour; it will be better, therefore, to be provided with both to meet such an accident. The tubes and scuppers should be closed by self-acting valves; a modification of an apparatus known as Kingston's valve might answer the purpose, or still better, a valve proposed by Mr. George Wells, of 15 Upper East Smithfield.

Provision for Self-righting.

The power of self-righting is a contested point among the best boat-builders; but they seem hardly to have given the subject full consideration. The accidents that have happened to life-boats have not been carefully investigated, and the necessity for meeting these accidents with a remedy has not forced itself upon their minds. But a remedy is necessary. Recent and sad experience has shown that a life-boat may be upset and may drown the crew from want of being able to right herself. Had the South Shields life-boat that upset in December 1849 possessed the means of self-righting, there is reason to believe that many of the crew might have been saved, whereas twenty of the best pilots out of the Tyne were drowned. This, however, is not the only instance of a boat upsetting and remaining bottom up, as will be seen hereafter; but it is sufficient to prove the absolute necessity of grappling with the difficulty, if difficulty it be, and

of overcoming it. Most life-boats have good sheer of gunwale, and, consequently, raised extremities, in which air-cases should be placed, in order that when the boat is bottom upwards, their buoyancy may co-operate most effectually with the weights in the bottom of the boat (now raised, it may be, considerably out of the water) to restore her to her originally upright position. The higher the centre of gravity of a vessel or boat is above the centre of buoyancy, *cæteris paribus*, the less is her stability; and by the separation of these two centres, a condition of instability will ensue, the effect of which will be, that with the slightest motion the boat will reverse her position, or right herself. To determine the necessary extent of separation of these centres in each case involves careful calculation. The best mode of applying this principle will readily occur to most boat-builders. The objections to the raised air-cases at each end are the wind they hold in pulling off a lee-shore, and the obstacle to approaching the stem and stern of the boat; the latter may be modified, the former must be tolerated for the greater benefit in another respect that arises from their adoption. If air-cases be used in the extremes, a layer of cork on the top will afford great protection to them, and better footing for the crew when necessity requires them to stand or jump on them.

It is a singular fact,—and it serves as an additional proof of the want of some systematic record of discoveries accessible to all persons, which I have already had occasion to remark upon in a former part of this Lecture,—that this property of self-righting, which, when recently pro-

posed as one of the requisites of a good life-boat, was almost treated with derision by some of our best boat-builders, should have been acknowledged and publicly exhibited at Leith by the Rev. James Bremner, of Walls, Orkney, as far back as July 1800. He first proposed in 1792 to enable all ordinary boats to self-right by placing two water-tight casks parallel to each other in the head and stern sheets, and by attaching 3 cwt. of iron to the keel. A boat thus fitted was publicly tried at Leith and repeatedly righted, for which a piece of plate was awarded to Mr. Bremner, and in 1810 the Society of Arts voted him a silver medal and twenty guineas.* Yet in 1850, half a century later, the practicability of making a boat right herself was almost derided!

Ballast.

If the requisite stability, and righting power, can be obtained without ballast, it is very desirable to avoid the incumbrance it causes, in case of having to transport a boat alongshore. In this respect water-ballast has a great advantage, as it is not taken in until the boat is fairly afloat, and may be discharged directly she again touches the beach on landing. Water-ballast, if used in immediate connexion with so-called water-tight cases, as it always must be, requires very good workmanship in the bulk-heads or partitions of the well, in order that they may not become leaky by straining when at sea, or by shrinking when the boat stands ashore, which she sometimes does for a year together. A doubt may arise, too,

* "Transactions of the Society of Arts," vol. xxviii. p. 135.

whether a boat does not require her ballast as much or more at the moment of launching than at any other time; lightness has its advantages, but in launching through a surf a boat requires a certain weight so as not to be readily thrown aside by a breaking sea. All these circumstances considered, we incline to the opinion that ballast given by cork inside in the bottom of the boat is best adapted to meet the varied contingencies to which a life-boat is subjected.

Although a minor point, it may be as well to add, that a moderate-sized cork fender, say four inches in diameter, should be carried round the sides and both ends of the boat at about six inches under the gunwale; but there is no occasion for the unwieldy fender, occasionally 12 inches deep, that may be seen in some life-boats. Holes in the bilge pieces, to enable a man to lay hold of them, should the boat be upset; timber heads, to make warps fast to at each bow and quarter; long sweep oars for steering at each end; a stout roller in the stem and stern-post to receive the cable; spare oars, one for each two that the boat pulls; life-belts, life-buoys, and life-lines; hand-rockets, heaving-lines, and such minor fittings, are indispensable in every life-boat.

Transporting Carriage.

A necessary adjunct to a life-boat is a carriage for transporting it alongshore, or, when the tide is out, for carrying the boat down to the water, and launching it without risk into the sea. The building a good carriage is a problem not easily solved: among the many models

of carriages sent to the Exhibition, not one exactly fulfils the conditions which appear essential. The carriage should combine lightness with strength, to carry at least 40 cwt. in case of need. The boat should be supported as near the ground as may be, so that it does not risk striking the bottom in going over a rocky beach; the wheels should be of large diameter for facility in moving, with broad tires, to prevent their sinking into the sand. The subject appearing to require much consideration, combined with a practical knowledge of details, an application was made by the National Shipwreck Institution to the Master-General and the Board of Ordnance, which was immediately acceded to, and directions given for a carriage to be built in the Royal Arsenal at Woolwich, where it is now in course of construction, under the superintendence of Colonel Colquhoun, R.A., Director of the Carriage Department of that establishment.

Accidents to Life-Boats.

On several occasions in the course of this Lecture allusions have been made to accidents which have happened to life-boats, as illustrating the necessity of certain qualities in them, and there can be no doubt that one of the most valuable aids towards the improvement of our boats would be a detailed account of all such disasters that from time to time have occurred. The following cases are some that have been gleaned, and they are mentioned without the least intention of imputing blame to any party, but solely with a desire to find a remedy, if possible, for

the causes of the disasters as far as we know them. They are as follows:—

At Hartley, on the coast of Northumberland, five miles north of Tynemouth, in the year 1810, one of Greathead's life-boats, carried overland from Blyth, rescued the crews of several fishing cobles that were prevented landing by a high sea tumbling in suddenly upon the coast, unaccompanied by wind. On returning towards the shore, the boat incautiously got too near the South Bush Rock, when a heavy sea broke on board and split her in halves; the result was, that the whole of the crew, thirty-four in number, were drowned.

At Shields, about the year 1820, Greathead's original life-boat, in taking the crew out of the ship *Grafton*, stranded on Tynemouth Rock Heads under the Spanish battery, struck upon a rock, bilged, and swamped, but she nevertheless remained upright, and brought both crews safely to land. This boat had no air-cases, but was filled with cork inside and out.

At Sandy Cove, Kingstown, Dublin Bay, in December 1822, the life-boat, under charge of Lieutenant Hutchison, R.N., went off to the assistance of the brig *Ellen*, of Liverpool, stranded in a heavy south-east gale. The boat had reached the wreck, and the men were coming down over the stern into her, when she filled; the crew attempted to bale the water out with their hats, when another sea fell on board, washed six men, and all the oars, and everything out of the boat, which drifted ashore among the rocks. On this occasion four men were drowned. The wreck drove higher up the beach on

the following tide, and at low water the crew were rescued.

At Lowestoft, in 1825, the life-boat went off to the sloop *Dorset*, wrecked on the southern part of the Holm Sand, in a south-east gale and spring ebb-tide, which caused a very heavy sea on the sand. In consequence of the crew not raising the plugs of the delivering-valves soon enough, the boat filled with water, became unmanageable, and part of the *Dorset's* crew were drowned. The boat, however, although floating level with the lower part of the gunwale, succeeded in reaching the shore in safety with the remainder of the crew of the sloop.

At Winterton, Norfolk, about the year 1829, the life-boat went off to a stranded vessel, the *Mariner*, and while lying alongside her, the flat or deck of the boat blew up, the boat swamped, and the men saved their lives by taking refuge on board the vessel they went to aid. The life-boat was of the form of a steamer's paddle-box boat; it had what was intended to be an air-tight deck, from twelve to fourteen inches above the keelson, but it was always difficult to keep tight, and in the end, as before stated, was forced up by the water beneath it.

At Appledore, Devon, in December 1833, the life-boat, in going off to the brig *Mary Anne*, of Exeter, stranded on the Northam Burrows, was struck by a heavy sea, and turned end over end, it is believed; two of the crew who had lashed themselves to the thwarts were drowned, a third got his lashings loose enough to keep his head above water in the bottom of the boat, and was taken out alive when the boat drove on shore, bottom up, about an hour

after. On this occasion three men were drowned; the remainder of the crew were taken off the life-boat by another boat. Had this boat had the power of self-righting, there seems no reason why the men should not have been saved.

At Scarborough, in 1836, the life-boat went off through the breakers to the rescue of a vessel; as the boat approached the outside of the broken water, a heavy overlap of the sea caught her and turned her *end over end*, shutting up one of the crew inside, where he remained in safety, getting fresh air through the tubes in the bottom, and was taken out when the boat drifted, bottom up, on the beach. Ten lives were lost. This boat is fitted with an air-case under her flat, contents 140 cubic feet, and with a small well for water-ballast, holding about 16 cubic feet, or half a ton.

At Blyth, Northumberland, in October 1841, the life-boat was pulling off against a strong wind, when a heavy sea struck the boat, caused her to run stern under, and to half fill with water. From want of delivering-valves the boat could not free herself; she became unmanageable, and fell off the wind, when a second sea struck her, and she capsized. On this occasion ten men were drowned. The boat had an air-case about 15 inches deep under her flat or platform.

At Whitby, in October 1841, the life-boat was pulling off in a strong E.N.E. gale and a cross sea, to carry provisions to some fishing-yawls that were in distress for food, when a heavy sea struck the boat at the same time that she was caught by a heavy fresh running out of the

harbour, and she capsized. No lives, we believe, were lost. This boat has an air-case 13 inches deep under her platform.

At Tynemouth Haven, in 1842, the life-boat went off on trial in a very rolling swell from the north-eastward; on returning towards the shore, under sail, a heavy sea topped on her quarter, hove her over on her beam ends, and filled the sail, when she turned bottom up, and thus drove ashore, the crew being taken off by a coble, and all saved.

At Robin Hood's Bay, on the coast of Yorkshire, seven miles south of Whitby, in February 1843, the life-boat went off to the assistance of a stranded vessel, the *Ann*, of London, during a fresh northerly gale. The life-boat had got alongside the wreck, and was taking in the crew, when, it is supposed, four or five men jumped into her at once on one side, when, a heavy sea striking her at the same time, she capsized. Many of the crew got on her bottom, while three remained under, and in this state she was drifted towards the shore on the opposite side of the bay. On seeing the accident from the shore, five gallant fellows launched a coble (fitted with air-cases as a life-boat), and tried to pull off to the rescue; but she had hardly encountered two seas, when she was turned *end over end:* two of her crew were drowned, and she drifted ashore bottom up. On this occasion Lieut. Lingard, R.N., of the Coast-guard service, and eleven men, lost their lives. Three men came on shore safely under the life-boat, and some on her bottom, the others were washed off. Had the life-boat possessed the power of self-righting, there

seems no reason why most, if not all the men, should not have been saved.

At Bude, in Cornwall, about the year 1844, the life-boat was exercising, when she shipped a heavy sea, dipped her quarter, and turned *end over end.* Two men were drowned. This boat is of the form of a steamer's paddle-box boat, with air-cases in her bottom 12½ inches deep amidships, contents 105 cubic feet; the surface of the flat or flooring is about on a level with the water-line. The air-case is divided into five compartments, but at the time of the accident it is said that the after compartment was not tight, and consequently it filled with water.

At Penrhyn du, Carnarvon, in the year 1847, the life-boat went off to the assistance of a vessel in distress; there was a heavy cross sea on, and the boat was upset, or, it is said, turned *end over end:* the crew supported themselves on the bottom of the boat for some time, when they made an effort to right her; when the boat rolled right round and remained on her face. The crew supported themselves until taken off by another boat.

At South Shields, on the 4th December, 1849, the life-boat, manned with twenty-four pilots, went out to the aid of the *Betsy,* of Littlehampton, stranded on the Herd Sand; there was a heavy sea from the eastward, but little wind, and a strong ebb-tide. The boat had reached the wreck, and was lying alongside with her head to the eastward, with a rope fast to the quarter, but the bowfast not secured. The shipwrecked men were about to descend into the life-boat when a heavy knot of sea recoiling from the bow of the vessel, caught the bow of the boat and

turned her up on end, throwing the whole of the crew and the water into the stern sheets. The bowfast not holding, the boat drove in this position, astern of the vessel, when the ebb-tide running rapidly into her stern, the boat completely turned *end over end*, and went on shore bottom up. On this occasion twenty out of twenty-four (or double her proper crew) were drowned under the boat. On seeing the accident two other life-boats immediately dashed off from North and South Shields, saved four of the men, and rescued the crew of the *Betsy*.

The boat to which this sad disaster happened is 34 feet long over all, and nearly 11 feet breadth of beam. It is of the form of a steamer's paddle-box boat, or nearly of the original Greathead form, has 30 inches sheer of gunwale, and 11 inches curvature of keel. It is fitted with an air-case under the flat or deck 15 inches in height, which contains 224 cubic feet of air, with a well for water-ballast in the middle holding 30 cubic feet, or 17 cwt. when full. The surface of the flat or deck is 20 inches above the underside of the keel; and the boat is fitted with flat top air-cases around the sides. The boat had an open well when the accident happened, and when thrown over end the water-ballast would run out into her stern. Had she possessed the power of self-righting, it is fair to suppose some of the men might have been saved.

It is but justice to add, and it is a fact highly honourable to the port, that the life-boats at Shields have been in constant use since Greathead first launched his boat there on the 30th of January, 1790, now sixty years since, and,

with the exception of the above accident, it is stated that no life has ever been lost in them, nor any life been lost from want of them. No record prior to 1841 was kept, but between the years 1841 and 1849 no less than 466 persons have been brought on shore from stranded vessels.

At Liverpool, in October 1850, the life-boat, in going out to the ship *Providence*, in tow of a steam-tug, in a very severe gale and heavy sea, shipped a succession of seas, when there being no means of freeing the boat except baling by buckets, the crew cut the tow-rope, and ran back to the Mersey. This appears to be a very rare occurrence, as in the course of the last eleven years the life-boats at Liverpool have been the means of assisting 269 vessels, and have brought on shore 1128 persons, affording decisive proof of the value of such boats when well manned and properly managed.

At Broadstairs, on the 6th March, 1851, the life-boat gallantly went off to the brig *Mary White*, stranded on the Goodwin, rescued seven of the crew out of ten, but, unfortunately, the boat's gunwale was stove while lying alongside the wreck; and the air-cases, being built into the boat, filled with water on the one side; the life-boat thus became disabled, and was drifting away to sea when it was picked up by a lugger, and brought on shore. These instances are all that have come to my knowledge; but as far as they go they are instructive, as pointing out some evils which it is right to shun, and some defects which require remedies.

Necessity of Training.

But especially do they enforce a point which is of essential importance, namely, the absolute necessity of a well-trained crew, and of sailor-like management of a life-boat. All the best qualities combined in one boat will not compensate for want of seamanship and judgment in the coxswain of the boat, who should be cool, steady, acquainted with the set of the tides, and know whether it is right to approach a wreck end on with his boat under her quarter, or to lay her alongside under the lee, or to drop his anchor to windward and veer down to the wreck, as is the usual practice with the Yarmouth and Deal boats, and for which purpose every life-boat should be provided with a heavy anchor and good cable. It is not any peculiarly good quality in the form of the Yarmouth and Deal luggers that enables them to brave the sea in all weathers, but it is the admirable manner in which they are handled by their hardy crews. And if we are to have an efficient set of life-boats along the coasts of the United Kingdom, it is absolutely necessary that fishermen and sailors should enrol themselves as crews and go out frequently for exercise in heavy weather, so as to become familiarized with the qualities of their boats, and to know exactly what they will do in the hour of need. They need no longer have a misgiving about their safety. That a thoroughly good life-boat can be built no longer admits of a doubt; and any boat-builder who will construct a boat after the lines shown in Plates 1 or 13 of the Northumberland Report, may rest assured that he will turn out a boat that, if properly handled, need not fear to face any weather at sea.

Existing means for saving Life.

In a former part of this Lecture I have shown that 681 wrecks occurred in the year 1850, and that 780 lives were lost on our own shores; we have now to consider the extent of the existing means for saving life. It is comprised in the following meagre statement:—In Scotland, with a seaboard of 1500 miles, there are eight life-boats; at St. Andrews, the Tay, Arbroath, Montrose, Aberdeen, Wick, Ardrossan, and Irvine; some of these boats are in tolerable repair, that at Wick is quite new, others are quite unserviceable. The boats at Aberdeen, Montrose, and St. Andrews, have been the means of saving eighty-three lives. There are Manby's mortars at ten stations, and rockets at eight stations; the latter have been instrumental in saving sixty-eight lives. Orkney and Shetland are without any provision for saving life, and with the exception of Port Logan, in Wigtonshire, where there is a mortar, the whole of the west coast of Scotland from Cape Wrath to Solway Firth (an extent of 900 miles, without including the islands), is in the same state.

In England and Wales, with a seaboard of 2000 miles, there are seventy-five life-boats; of these forty-five are stationed on the east coast. On the shores of Northumberland, from Berwick-on-Tweed to the Tyne, there are seven boats, or one for every eight miles; there are three at Shields; fifteen on the coast of Durham and Yorkshire, or one for every ten miles; in Lincolnshire, four boats, or one for every fifteen miles; on the coasts of Norfolk and

Suffolk, from Cromer to Southwold, there are ten boats, or one for every five miles; a fact highly creditable to the county associations. There are life-boats also at Aldborough, Harwich, Broadstairs, and Ramsgate.

On the south coast, from Dover to the Land's End, a distance of 420 miles, there are eight life-boats, but none at Penzance where most needed. At the Scilly Isles there is one inefficient boat; the same at St. Ives and Bude; and one, a little better, at Padstow. So that from Falmouth round the Land's End by Trevose Head to Hartland Point, an extent of 150 miles of the most exposed coast in England, there is not a really efficient life-boat. In the Bristol Channel the North Devon Association maintains three life-boats in Bideford Bay. There is a new life-boat at Ilfracombe, and one at Burnham. On the south coast of Wales—from Cardiff round to Fishguard, a distance of 200 miles—there are two recently placed life-boats, one at Llanelly, the other at Tenby. There are twelve boats on the west and north coasts of Wales, some in a very defective state; and nine in good order at five stations in the important port of Liverpool, liberally supported by the Dock Trustees, and having permanent boats' crews. These boats, as before mentioned, have brought on shore 1128 persons during the last eleven years, thus proving the value of life-boats when kept in an efficient state and properly managed. In all there are thirty boats, one-half unserviceable, to supply the wants of a seaboard 900 miles in extent, from the Land's End to the Solway, including the ports of Liverpool and Bristol.

In the Isle of Man, which, from its position near the centre of the Irish Sea, and in the midst of a great part of the traffic of Liverpool and Belfast, Glasgow and Dublin, has its shores much exposed to wrecks, there is not a single life-boat. The four boats established here by the exertions of the late Sir William Hillary, Bart.—a name honourably associated with that of Mr. Thomas Wilson, formerly M.P. for the City of London, as founders of the National Shipwreck Institution—have been allowed to fall into decay, and hardly a vestige of them remains.

In Ireland, with an extent of 1400 miles of coast, there are eight life-boats, and they are inefficient. Yet there is no part in the United Kingdom in which wrecks are more frequent than on the coast of Wexford; and when we consider that, in addition to the cross-Channel trade, the whole of the foreign trade to Liverpool, and Glasgow, and Belfast, passes through the Irish Sea, the frequency of wrecks on the east coast of Ireland need not create surprise.

Rockets and Mortars.

From official returns, it appears that many of the Coast-guard stations on the shores of England and Wales are supplied with rockets or mortars, at the expense of Government, and some stations have both. There are seventy-three stations which have rockets, thirty which have mortars, and forty-one which have both mortars and rockets. At first sight this seems a fair proportion, and so it would be if the rockets were efficient; but the returns

go on to say, at twenty-four stations rockets have burst, and at forty-two stations lines have broken. In some instances the rockets were old, in others badly made, and the lines in the same state. Yet even with these drawbacks, rockets and mortars have proved most useful. At twenty-two stations where a record has been kept, not less than 214 lives have been saved by them, besides several crews at Caistor, near Yarmouth, and many lives at eight other stations, where no account has been kept of the number. The veteran Captain Manby may reflect with just gratification in his declining years that the mortar he was instrumental in bringing into use as a means of saving life, has proved very serviceable.

There are twenty-five stations in Ireland at which there are either rockets or mortars; but here, as elsewhere on the coasts, lines have broken and rockets have burst; the rockets, too, might be better distributed. Yet, notwithstanding these minor evils, which may be set right without any great difficulty, the testimony in Ireland as well as in England is decisive as to the value of the rocket in effecting communication with a stranded vessel, and thus saving life from shipwreck.

The merit of the first suggestion for forming a connexion between a stranded vessel and the shore by means of a mortar is unquestionably due to Sergeant John Bell, afterwards Lieut. Bell of the Invalid Artillery, a worthy non-commissioned officer, at the siege of Gibraltar. In August 1791, a public trial of his plan was made at Woolwich, when a shell, loaded to weigh seventy-five

pounds, fired from a mortar on board a boat, carried out 150 yards of a deep-sea lead line, by means of which, Bell, with another man, worked himself on shore on a raft of casks. He also proposed to throw a grapnel fitted to be fired from a common six-pounder gun, for the same purpose; and further recommended that the mortar apparatus should be placed at all ports, as Shields, &c., where vessels are liable to ground near the shore, when a line might be thrown over the ship, and thus be the means of saving life. The Society of Arts awarded fifty guineas for this invention; the account of which was published in 1792, in the tenth volume of their "Transactions,"* and a further description and engraving in 1808;† the grapnel and part of the original apparatus may now be seen in the Repository grounds at Woolwich. But the credit of bringing the mortar into effective use for saving life around our coasts is unquestionably due to Captain Manby, as above stated, and most valuable has it proved to be.

For the first use of the rocket, to effect a communication with a stranded ship, we are indebted to Mr. Henry Trengrouse, of Helston, Cornwall, who having witnessed the disastrous wreck of the *Anson* in 1807, on Looe Bar, Mount's Bay, when one hundred lives were lost, proposed the use of a small rocket, with a line attached, to be fired from the ship to the shore. As far as I am aware, his plan was never brought into use, but the inventor received the gold medal of the Society of Arts, and fifty guineas premium in the year 1820.‡ The great merit

* Page 203. † Vol. xxv. p. 135. ‡ Transactions, vol. xxxviii. p. 168.

of Trengrouse's plan was the firing from the ship to the shore, which undoubtedly is the better mode, if vessels can be induced to carry the necessary apparatus, which hitherto has not been the case. Sir William Congreve, it is understood, proposed a somewhat similar apparatus.

But the merit of bringing into use the rocket to carry a line from the shore to the wreck, undoubtedly belongs to Mr. Dennett, of Newport, Isle of Wight, who, about the year 1825, proposed the adoption of a nine-pounder rocket for this purpose, which has since been successfully used in many parts of the United Kingdom. In 1837, Mr. Carte, of Hull, recommended the use of a twelve-pounder rocket for the same purpose, which is now placed at several stations, particularly on the coast of Yorkshire; he has also a sea-service apparatus for use on board a ship, which is efficient, portable, and economical, yet our ships cannot be induced to carry it. The last proposal for this purpose is that by M. Delvigne of Paris, a model of which was in the Exhibition. His proposal is to ball the line up inside a wooden projectile, and to fire it from a howitzer; on a trial during the past summer in Woolwich Marshes, he succeeded in throwing a line 400 yards, we believe, from a five-inch howitzer, with a charge of eight ounces of powder. It is far from impossible that this plan of projecting a line may be so modified as to be rendered very serviceable.

Fully admitting the good service that both rocket and mortar have rendered in their present state, there can be no doubt that the rocket and line may be greatly improved. The maximum range now attained with Dennett's

9-lbs., or Carte's 12lbs. life-rocket in fine weather is 350 yards, but in stormy weather, such as that in which wrecks usually occur, it seldom reaches 300 yards. On many parts of the coast such a limited flight would not reach a stranded vessel: it seems desirable, therefore, to make every effort to increase the range, whether by an improvement in the rocket, or by substituting a lighter line of Manilla or other hemp; and, considering the importance of the object and its intimate connexion with the life-boat, we may be permitted to express our earnest hope that the experiments on this subject which it is understood have been set on foot, will be continued with as little delay as possible until a favourable result is obtained.

Coast-Guard.

In looking over the list of wrecks, no one can fail to be struck at the prominent position occupied by the officers and men of the Coast-guard service on all such occasions. The records of the National Shipwreck Institution show that about one-third of the medals and rewards granted by that Institution for meritorious services are awarded to the Coast-guard. Independently of their other services, they have proved themselves in cases of wreck to be an invaluable body of men; they are familiar with the use of the mortar and the rocket; are always on the watch; always ready to act; and nothing can be more striking on such occasions than the advantage of a well-trained, organized body acting as one man, over a willing, but undisciplined, assemblage of sailors and fishermen. On any future occasion of shipwreck, we may trust that the Coast-

guard officers and men will display the same energy that has hitherto so honourably distinguished them.

Sea-Coroner suggested.

An attentive consideration of the Wreck Chart annexed to this Lecture, and a careful examination of the returns of wrecks by the Coast-guard officers, forcibly impress on the mind the painful conviction that the greater part of the casualties that occur are not occasioned by stress of weather, but that they are mainly attributable to causes within control, and to which a remedy might be applied. It would be an easy task to enumerate these several causes, but from the absence of exact information it would be difficult to assign the particular cause to each wreck. It might have been reasonably expected that the depositions before the Receivers of Admiralty Droits would have thrown some light on the subject, but those documents are seldom of any use for ascertaining the real cause of wreck. The master of the stranded vessel is naturally anxious to make out the best case for himself, and usually tells as little as he can help; and the receiver, who nine times out of ten is a landsman, is quite unequal to bring out the facts of the case. Some competent local tribunal, then, is necessary before whom the causes might be investigated on the spot, and there would seem no difficulty in forming such a tribunal; it might be as easily managed as a coroner's inquest; the machinery for the purpose is already organized. The inspecting commander of the Coast-guard of the district, the collector or chief officer of customs, and Lloyd's agents, are to be found nearly everywhere around

the coasts, and they could form a tribunal well acquainted with nautical affairs, and in which all merchants and ship-owners would have confidence; and were such a body, with the assistance of the nearest magistrate, authorized to inquire into and report to the Admiralty or Board of Trade on every case of wreck, there is little doubt but that in a very few years the list of wrecks on our own coasts would be greatly diminished. It is well and right to place life-boats, but a better means of preserving life would be to prevent or diminish shipwrecks.

It is not only loss of life to a fearful extent that occurs in these wrecks, but, although a minor consideration, the loss of property is enormous. In the Parliamentary Report on shipwrecks of the year 1836, the loss of property in British shipping wrecked or foundered at sea, is estimated, on an average of six years, at three millions sterling per annum; we may fairly, therefore, assume, that half that amount is annually lost on our own coasts. The whole of this property, though covered by insurance to certain parties, is not the less absolutely lost to the nation, and its cost paid for by the British public, on whom its loss must ultimately fall. The same Parliamentary Report estimates the annual loss of life by the wreck or foundering of British vessels at sea at 1000 persons in each year, and this loss is also attended with increased pecuniary burthen to the British public, on whom the support of many of the widows and orphans left destitute by such losses eventually devolves. Thus, taking only the financial view of the case, the prevention or diminution of shipwreck would be a great national gain.

Conclusion.

A review of the facts furnished by the Coast-guard Returns affords a cheering encouragement as to the future, inasmuch as the number of lives saved from shipwreck through the instrumentality of life-boats, mortars, and rockets (even in their present imperfect, and, on many parts of the coast, ill-organized state), affords undoubted proof of the value of such means for preserving life. Wherever the boats have been looked after, and the crews well trained, as at Liverpool, Shields, and on the coasts of Norfolk and Suffolk, the most signal success has rewarded their exertions. This fact is most encouraging, and cannot be too strongly insisted upon. It is the most gratifying reward to the several local committees and individuals who have perseveringly done their duty, and gives firm ground of encouragement for the future.

The path, then, is clear and distinct. The first step is to ensure a safe and powerful life-boat, and this we feel confident has been accomplished; the next is to build a sufficient number of such boats, place them where required, organize and train the crews, and provide for their supervision and maintenance. In fact, to do for the rest of the United Kingdom what his Grace the Duke of Northumberland has liberally undertaken to do for his own county, namely, to place a well-built life-boat at each of the most exposed points of the coast, and rockets or mortars at all the intermediate stations.

There need be no misgiving for want of funds—no work of real benevolence in this country, when undertaken

in the right spirit, was ever allowed to languish for lack of means; and it is not to be supposed that the cause of the preservation of life from shipwreck will not find equal support. It is not to be believed that the British public will quietly look on and see a thousand lives annually perish, and not make an effort to save a portion of that number, if satisfied that the means of doing so are within their reach. Past experience declares that the means are within our reach. Nor would the task be difficult: the question has only to be grappled with in earnest, and all obstacles will vanish. There is no doubt of hearty co-operation along the whole of our coasts; all that local committees require is to be well directed, and to be enabled to place entire confidence in those who undertake to guide them.

The success that has attended exertions in one place may fairly be reckoned upon in another. There seems no reason why a very few years should not see a life-boat stationed at each of the exposed points on the most frequented parts of the coasts of the United Kingdom; by means of which—with the blessing of Divine Providence upon the endeavours of those who undertake the work—the best results to the cause of humanity may confidently be anticipated.

March 3, 1852.

INDEX TO THE FIRST SERIES.

Acoustics, 390
Agricultural instruments, 436, 437
Alloys of iron, 66
Alloys, knowledge of, possessed by the inhabitants of India, 471
Alum, manufacture of, 146; how obtained in India, 463
America, *Yacht*, where lay her superiority to those of Great Britain, 558
American clippers and liners, why superior in speed to British merchant-vessels, 555, 557
Ammonia, loss of, in smelting, 168
Anchors, by Porter and Rodger, 570
Apparatus for separating foreign matter from coal, 48
Architecture in India, 526, 527
Armaments, 569, 570
Arrow-root from Bermuda, 219; St. Domingo, ib.; W. Australia, ib.
Art, the precursor of science, 7, 28
Astronomical instruments, 339–353; none exhibited by France, 349

Babylon, excellence of the arts and manufactures in, 448
Bakewell, Mr., copying electric telegraph, 388
Balances, 385
Baleen, or whalebone, 98–103
Barilla, import of, superseded, 180
Barometer, by Newman, 364; by Griffiths, ib.; by Negretti and Zambra, ib.; self-compensating, by Harris and Son, 365; by Yeates, ib.; by M. Bourdon, 365–368
Barrow, Mr., excellence of his barometers and thermometers, 370
Beard, Mr., enamelled daguerreotypes by, 375
Beaufoy, Colonel, experiments on the resistance of fluids, 548, 549
Beeching, James, builder of the Northumberland prize model lifeboat, 578
Beehives, their defects, 240; Milton's improved, 241
Beetroot, 230
Bell, Jacob, Esq., Lecture on the chemical and pharmaceutical processes and products, 135
Bell, Lieut., his invention of the mortar as a means of communication with stranded vessels, 615, 616
Bentham, Brigadier Sir Samuel, his improvements in machine tools, 309, 310
Bérard, M., his method of separating foreign matter from coal, 48
Bessemer, Mr., his apparatus for holding large glass plates while being polished, 433
Bidery ware, its manufacture in India, 471
Birch-oil, from Russia, properties of, in the manufacture of leather, 260
Blackwell, Mr. Samuel, collection of ores by, 51
Blanqui, M., favourable opinion of, on the value of the Indian collection, 534, 535
Bleaching, 169; as practised in India, 479
Blood in abattoirs, mode of utilising as food, 223; importance as manure, 224

Bombax, utility of its fibre, 275, 276
Bond, Mr., application of magnetism and electricity to astronomical purposes, 349, 350; his apparatus for observing transits by means of a galvanic circuit, 350–352
Boring tools, 436
Bourdon, M., peculiarities in barometers exhibited by him, 365–368
Bramah, Mr., his improvements in machine tools, 309
Brass, specimens of, 66
Breakwaters, models of, 436
Bremner, Rev. James, of Walls, Orkney, his plan for enabling life-boats to self-right, 601
Brett, J., printing telegraph by, 388
Bristles, Russian, &c., 97
Bronski, Count de Bronno, his raw silk and cocoons, 110
Brooke, Mr., his system for the photographic self-registration of natural phenomena, 383–385
Brunel, Mr., his improvements in block-making machinery, 310
Buffers, vulcanized India-rubber, by Mr. De Bergue, 419
Bullock, Captain, his plan for forming a raft in cases of shipwreck, 585, 586
Bulrush, flowers of, food from, 219

Calculating machines, 386
Calico bleaching, 170; Mercer's mode of fining by immersion, 172
Calico-printing, chemistry of, 172, 175; machine, by Mr. Dalton, 424; in India, 480; excellence of Indian designs in, 483
Candles, manufacture of, 182–186; Indian, 484
Canvass loom, by Messrs. Parker, 428; by Mark Smith, ib.; by Harrison, ib.
Cameo shells, 126
Caoutchouc, or Indian rubber, extent of which it is used in this country, 255; carelessness in its collection has caused a depreciation in its value, 256
Card wire-cloth, machine for making, 426
Carpets, Indian, excellence in design, 160; manufacture of, in India, 499–503
Carriages, collection of, unsatisfactory, 422
Carving, practice of, in India, 510–512
Catamarans, models of, 585
Cattimundoo, the, possesses many of the properties of gutta percha, 257
Cements, knowledge of, possessed by the inhabitants of India, 479
Centrifugal pumps, 414, 415; blowing-machine, 416; machines, 433
Chain cables, by Sir Samuel Brown, 570
Chairs, railway, by Ransomes and May, 421
Charts and plans, 571
Chemicals from Philadelphia, 141; from Italy, ib.
Chemical arts, as practised in India, 462–487
Chemistry, animal products of, 141
China grass, method of preparation by Messrs. Wright, 275; uses to which it may be applied, ib.
Chinese safflower, reasons of its superiority to the Bengal safflower, 264
Chocolate, foreign, 228, 241
Churka, an Indian machine for cleaning cotton, 424
Cigars, English-made, 237; consumption of, in Germany, 238; Portuguese, ib.
Circular saw, invention of, 312
Civil engineering and architecture, 434
Classification of objects exhibited, 20–24; the French systems adopted at the Expositions, 21; value of a permanent classification of materials, instruments, and productions, 25
Classification of the various parts of vessels desirable, 567, 568
Claudet, M., photographs by, 375
Claussen, Mr., his plan of converting flax into cotton, 273; similarity of his process to that of Lady Moira, 285

Clockmakers' machines, 306
Cloth-shearing machines, 426
Coal, specimens of, 43; weight of, annually raised, 44; produce of English collieries, 45
Coal-tar, its applications, 188
Coal districts, maps and models of, 45
Coalbrookdale Company, collection of rolled iron and railway bars, 421
Coaling steamers, best method of, 564
Coast-guard, services rendered by the, 618
Coble, qualities of, as a pilot-boat or a fishing-boat, 582
Cocoa, Trinidad, 227; adulterations in, ib.; effect of differential duties on, 227, 241
Cocoa-nut and palm-oil, extensive importation of, for the manufacture of candles, 258
Cocoons, silk, 107; Chinese plan of winding, 108
Coffee-leaves, a substitute for tea, 228
Coffee, Snowden's mode of preparing, 229
Colmar, Thomas de, calculating machine by, 387
Colleges, industrial, advocated, 202
Colours, Mr. Mackenzie's machine for grinding, 432
Compasses, steering and azimuth, exhibited by the Admiralty, 570; by Dent, ib.
Compound tires for railway wheels, by Brigg, 419
Condenser card, of Mason of Rochdale, 425
Copper ores, 58
Copper smelting, 45
Coracle, of wickerwork, contrast between, and the *Queen*, 542
Corals and sponges, 126
Cotton, amount and value of, imported into this country, 266; varieties of, ib.; whence the chief supplies are obtained, 267; of the United States, ib.; of British India, 268; of British Guiana, 269; of Algeria, ib.; method of cleaning, ib.; Mr. Mercer's process for modifying its chemical and physical properties, 270
Cotton drawing-frame, 423
Cotton machines, 423
Cotton manufacture in India, 487–494
Crampton, locomotive engine by, position of the axle of driving-wheel behind the fire-box, 417
Crystals of tartaric and citric acids, &c., 138

Daguerreotypes, characteristics of the collections of, furnished by various countries, 576
Darning, practice of, in India, 505, 506
Davies, Mr., his improved governor in steam-engines, 411
De la Beche, Sir Henry, Lecture on mining, quarrying, and metallurgical processes and products, 37
Delarue, Mr., his process for applying iridescent films to the purposes of decoration, 390
De la Tour, Baron, his invention of the syrene, 390–392
Depôt de la Marine, charts of the coast of France, from the, 571
"Depurator," or cotton-cleaner, by M. Risler, 423
Derrick crane, by Henderson, 413
"Dextrine," or British gum, extent to which it is used by calico-printers, 255
Dividing machines, 389
Diving dresses, 436
Down and feathers, 113
Drugs comprised in the Materia Medica, 147
Dudley, Sir Robert, his improvements in the construction of vessels, 545; construction of a *fregata*, by him, 546
Dyes, as produced by nature and by chemical science, 262; improvements in calico-printing have caused a demand for new ones, 263; of India and New Zealand, 264; importance of carefulness in extracting by colonists, 265

Dyeing, changes which the art of, has undergone during the last half century, 201; extent to which it is practised in India, 479, 480

East India Company, exertions of, for improving the cultivation of cotton in India, 268; reward offered by them for an efficient saw-gin, 424
Ebbw Vale Company, collection of rolled iron and railway bars, 421
Ebbw Vale model mine, 54
Ebony, red, from South Africa, properties of, 279
Education, industrial, importance of, 195–208
Egypt, similarity of the arts practised in, and in India, 452
Electric telegraphs, 387
Electrical machines, 389
Electro-plating, new process of, 145
Embroidery, art of, practised in India, 506
Enamels, Indian and European methods of making, 475, 476
Encaustic tiles, how used in India, 479
Engraving, art of, in India, 520, 521
Envelope-making machines, 432
Erricssen, collection of nautical instruments exhibited by, 354; sounding machine by, 570
Ertel and Sons, portable universal instrument by, 347, 348
Essences of fruit, 144
Etruscans, extent of their civilisation, 452
Executive Committee, their exertions, 402
Experiments in vessels, desirableness of their being carefully registered, 565–567
Eucalyptus, specimen of, at the Great Exhibition, 278

Feathers, their construction, 113; Russian, 116; ostrich plumes, 116
Fecula, vegetable, 218
Fine arts, as practised in India, 518–527
Fire-engines, 416
Fisheries, importance of, to this country, 571; number of boats and persons engaged in, 572
Fishing-boats, models of, 571; reasons why they should be improved, 572
Flax, preparation of, 271; Schenck's process, 272; conversion of, into cotton, by Mr. Claussen, 273; by Lady Moira, 285
Flax-machines, 427
Foot-mortising machine, invention of, in America, 316
Forests, reckless destruction of, in England, 277
Francis, Mr., of New York, model of "the life surf-boat," 583
Frigates, models of, 555
Fringe loom, by Messrs. Reed of Derby, 428
Fuel, included in Class I., 42; mineral fuel, ib.; fossil fuel, 43; patent fuel, 48
Fusee-engine, 307

Gas, coal, its manufacture, 186
Gelatines, 127
Gems, occurrence of, 69
Geometry, artizans ought to possess a knowledge of, 300
Glaisher, James, Esq., Lecture on philosophical instruments and processes, as represented in the Great Exhibition, 323; nature of the duties devolving upon him as reporter and juror of Class X., ib.
Glass, knowledge of, possessed by the inhabitants of India, 473, 474; simple process of making in Behar, 474
Glass, plate, superiority of French, 194
Gold, specimens of, 62
—— Professor Plattner's process adopted in the Reichenstein mines, 63
Great Britain, the steam-ship, 563; model showing the means adopted for raising, when stranded on the coast of Ireland, 435

Great Exhibitio n buildi ng, 443
Greathead, Henry, the first inventor of life-boats, 577
Grindstones, 68
Guiana, British, chemical products of, 150
Gums and resins, variety of, at the Great Exhibition, 253; want of care in the collection and preservation of, 254
Gutta-percha, first specimèn of, 32; introduction of, by Dr. Montgomerie, 257; similar substances to be found in various countries, ib.

Hair, Russian, 97; camel's-hair cloth, ib.; Spanish, ib.
Hawthorn, engine by, peculiarity of, 417
Hemp, methods of preparing, 273
Henry, Mr., his process for coating balances, weights, &c., 386
Hensman, H., Esq., Lecture on civil engineering and machinery generally, 405
Hibbert and Platt, collection of machinery by, 422
Hicks, Mr., his compound press, 412
Hindoos, their knowledge of agriculture, 455; their character, 456; their systems of philosophy, ib.; their acquaintance with the mathematical sciences, 457; with the arts and sciences, 459; their habit of employing symbols in signing their names, 460; their municipal institutions, 460, 461
Horns and antlers, nature of, 117; varieties of, 118, 119; Indian, 121; Canadian, ib.
Horse-power, indicated and nominal, difference between, 566
Hosiery-machines, 429
Honey, 239
Hybridizing of plants, 215, 218; Gaertner's experiments, 216; Raynbird's, ib.; Maund's, 217; uncertainty of results, ib.
Hydraulic presses, 412, 413
Hydrographic Office, charts and plans by the, 571

Iridescent films, application of, to the purposes of decoration, 390
India, false ideas respecting, in this country, 444; antiquity of the arts in, 445; its physical features favoured early civilisation, 454; its climate, ib.
Indian Archipelago, the contributions of the islands of the, 16
Indian articles likely to command a sale in European markets, 532, 533; selection from by the Government Committee for the selection of articles for the Schools of Design, 535, 536
Inman, Dr., editor of Chapman's "Architectura Navalis Mercatoria," 548–551; acknowledgment of his value as a naval instructor, 552
Iodine from kelp, 143
Iron, various kinds of, 56; largest bar ever made, ib.; paper of Bohemia, 57; from Austria, &c., 56; Mr. Blackwell's statement about, 58; application of, to the construction of ships, 563
Iron smelting, 167; economy of the hot-blast, 168; waste of fuel, ib.
Isinglass, 129
Ivory, varieties of, 122

Jacquard-looms, 428
Jewellery, manufacture of, in India, 508–510
Jones, Owen, Esq., his high opinion of the instructional value of the Indian collection, 537, 538

Kinguel, Turkish, a substitute for coffee, 229

Labuan, its productions, 15
Lace-machines, 429
Lace-making in India, 503
Lacquer-ware, methods of employing, in various parts of India, 485, 486
Lahure, M. Ed., model of life-boat used at Havre, 583
Land steam-engines not fairly represented at the Exhibition, 407

Lang, Oliver, vessels designed by him, 560
Language, its progression, 5
Lead, Mr. Pattinson's invention for extracting silver from lead ore, 59
Lead ores, 59
Leather, no substance hitherto found to replace oak-bark in tanning, 265; manufacture of, 175; in India, 484
Levelling and surveying instruments, 355
Life-boat, the first invented by Henry Greathead, 577; its dimensions, ib.; essential qualities to be regarded in the construction of a,—Form, 587; dimensions, 587–591; materials, 591, 592; extra buoyancy, 592, 593; air-cases, 593; internal capacity for holding water, 597; means of freeing the boat of water, 598, 599; provision for self-righting, ib.; ballast, 601, 602; transporting carriage, 602, 603
Life-boats, the necessity for, in this country, 575, 576; models of, sent to the Exhibition in consequence of the offer of the Duke of Northumberland, 578–585; the efficiency of those supported by the Dock Trustees of Liverpool, 579, 580; in France, 584; in Belgium and Holland, ib.; in the island of Jutland and on the coast of the Baltic, ib.; accidents which have happened to, on the coasts of Great Britain, 603–610; necessity for training the crews of, 611; present number of, in the United Kingdom, 613, 614; success that has attended the use of, 622; necessity for a larger number of, 621, 622
Light-houses, by Chance and Wilkins, 359, 436
Lindley, Professor, Lecture on substances used as food, 211
Linen, improvements in bleaching, 169
Liverpool, imports, 31
Lloyd's, average number of wrecks registered at, 556; list of shipwrecks at, imperfect, 577
Locomotive engines, 416

Machine-tool making, slow progress of, 317
Machinery, difficulty experienced in dividing it from Manufactures at the Exhibition, 405
Machines incompletely represented at the Great Exhibition, 296; artizans should possess a knowledge of those employed in other trades than their own, 297–317; object of, 304
Madder, beneficial effect produced in the cultivation of, at Avignon, by the application of science, 262
Magnetic course indicator, 570
Magnetism and electricity, discoveries in, 349
Man by nature an artificer and an artist, 16; his gradual progress in science, 326, 327
Manu, Institutes of, 456
Manby, Captain, the first to bring the mortar into effective use in shipwrecks, 616
Manilla rope by Mr. Robertson, 570
Manual and mechanical arts as practised in India, 503–518
Manufacturing machines, 422
Marbles, serpentine, porphyry, granite, 68
Marine oscillating engines for paddle-wheel boats, 408, 564
Mariner's compass, discovery of, by Gioja of Amalfi, 543
Martens, Mr., daguerreotypes by, 377
Maudslay, Henry, his improvements in machine tools, 309, 310, 311
Maudslay and Field, feathering-screw used advantageously in screw-steamers by, 410, 411
Mayall, Mr., excellence of the daguerreotypes exhibited by him, 376
Meats preserved, 223, 224.
Meat-biscuit, Borden's American, 224; Playfair's analysis of, 225

Medals, beneficial effects of the award system, 399
Medicinal plants, 140
Mercer, Mr., his process for modifying the properties of cotton, 270
Merchant vessels, models of, by Messrs. Wigram and Green, &c., 555; influence exerted on, by the tonnage-laws, 555, 556; improvements in, found necessary to compete with American liners, ib.
Merz of Munich, portable equatoreal by, 348
Metals; platinum, palladium, iridium, rhodium, 64
Metallurgy, in India, 464–471
Meteorological instruments, 361–375; conditions of, better understood by makers abroad than in this country, 368; the want of good, much felt, ib.
Meteorology, establishment of, as a science, 368; increased number of observers in, 369; difficulty of obtaining good instruments for observations in, ib.
Microscope, applications of the, 359
Microscopes, excellence of those exhibited, 358, 359
Middle Ages, progress of art during the, 8
"Middlemen," effect of their method of transacting business on the introduction of new kinds of vegetable raw produce, 251
Miller, Professor, letter by, on the evils attendant on using bad instruments in meteorological observations, 370–375
Mineral manures, 69
Mineral substances, 37; geographical position of, 38
Moira, Lady, her process for converting refuse of flax into cotton, 285, 286
Molasses, beetroot, purification of, 230
Mortars, 614
Mortising-machine, self-acting, invented by Bentham, 311
Mosaics and inlaid work, in India, 522, 523
Mother-of-pearl, 125
Museum of Industry, arguments for the establishment of a, 286, 287; establishment of a, in the Austrian Empire, by Von Kees, 287
Music, instruments of, in India, 525

Nacre, 125
Nancy Dawson, yacht, circumnavigated the globe, 558; assisted in the search for Sir John Franklin, ib.
Nautical astronomical instruments, 353, 354
Naval school, reasons for the establishment of a, 551
Naval architecture, state of, in early times, 541, 542; vessels of the Scandinavian sea-kings, 542; in the time of King Alfred, 543; Henry I., ib.; Richard Cœur de Lion, ib.; Henry VII., 544; Elizabeth, 545; in more recent times, ib.; inferiority of our vessels to those of France and Spain proved during the last war, 547; no scientific treatise in England on, 548; Papers on, 549; recent treatises on, ib.; no specimens of, from the Continent exhibited, 570
Navy, education given at present to young men entering the, 551
Needles not often used in India, 505
Net-making in India, 504
Newspaper-folding machine, 431
Nineveh, extent to which arts and manufactures were practised in, 449
Northumberland, Duke, offers a reward for the best model of a lifeboat, 573; result of that offer, ib.; his intention of placing the best life-boats that can be built on the coast of Northumberland, 574; remarks by Baron Charles Dupin, in awarding him a Council Medal, ib.

Oersted, discoveries by, in electricity and magnetism, 349
Oils, perfumes of, artificially produced, 181
Oils, vegetable, comparatively small number of, used by manufactures, 257; care required in the preparation of, for exportation, 259; from New South Wales, properties of, 260
Opticians, generally adverse to exhibiting, 337
Ores, 38–49; fallacious collections of, 40; specimens of, 41; from the Burra-Burra mines, 50; from Russia, 51; from Sweden, ib.; from the United States and Canada, ib.; occurrence of metalliferous ores, 52, 53; extraction of, 55; dressing of, ib.
Otaheite, its contributions, 15
Otto of roses, 149
Owen, Professor, Lecture on the raw materials from the animal kingdom, 77

Painting in India, 518, 519
Paper, knowledge of its manufacfacture in India, 486, 487
Paper-cutting machine, by Mr. Wilson, 432
Paper-making machinery, 432
Papier-mâché panels used instead of wood in railway carriages, by Mr. Haddan, 419
Patent fuels, 48
Patent-laws, injurious effects of, 438, 439
Patterns of Indian articles, excellence of their designs, 524, 525
Peake, Mr., qualities of the lifeboat exhibited by him, 586
Pearls, Indian and Ceylon, 124
Perfumery, 181
Permanent way for railways, 420
Persians, ancient practice of the arts by, 449
Pett, Mr., Phineas, the first to construct a vessel on scientific principles, 546
Pharmaceutical products, of India, 464
Philosophical instruments, classification of, by Dr. Playfair, 332–334; as exhibited, 334–337
Philosophical instrument-makers, 318
Phosphorus made innocuous, 144
Photography, improvements in the processes of, 375; utility of, as applied to the purposes of art, science, and literature, 382; application of, to astronomy, 383
Physical optics, instruments connected with, 361
Planing-machine, origin of, 313; progress of, among engineers, 314; specimens of, 433
Plantain, dried, 220
Playfair, Dr. Lyon, Lecture on the chemical principles involved in the manufactures exhibited, 150
Plumbago, 67; Mr. Brockedon's process of compression of, ib.
Pontoons, models of, 585
Porcelain, or China clay, 69
Pottery in India, 476; improvements in, of late years, 477
Practical men, reasons for organising a system for the education of, 301–304
Printing in gold and silver in India, 483, 484
Printing-presses and machines: self-inking, 430; Cowper's cylinder; Napier's cylinder; Scandinavian, by Hopkinson; Applegath's, 431

Railway-carriages, 418
Railway wheels and axles, 419; cast-iron wheels from America, ib.
Railway-breaks, 420
Randall and Saunders, machine for quarrying stone, 432
Raw produce, vegetable, influence of the Exhibition on its cultivation and preparation, 245; its importance as affecting national prosperity, ib.; comparison of the productions of various countries as represented at the Exhibition, 246, 247; the present method of

business in this country tends to retard the introduction of new substances in manufactures, 248–250, 282; reasons why collections of, have met with little favour in this country, 252
Reade, Rev. J. B., improved eye-pieces by, 358
Rig-Veda, antiquity of, 455; translation of, by Professor Wilson, 456; internal evidences of its having been written in India, 456, 457, *note*
Rockets, 614
Rolled iron, capability of producing in this country, 420
Rope-machine, by Mr. Crawhall, 427
Ross, large equatoreal by, 339
Royal Yacht Squadron, 558
Royal George, the, one of the first vessels that had her bottom sheathed with copper, 547
Royle, Professor, J. F., Lecture on the arts and manufactures of India, 443

Saccharometer, 361
Safety-lamps for mines, 46
Sampan of the Malayan seas, similarity of the lines of, to those of the *America*, 528
Saw-gin, 423; unsuccessful attempts to procure a substitute for, ib.; reward of 5000 rupees offered by the East India Company for the machine best suited to Indian cotton, 424; the efficiency of that used by native Indians, 530
Schenck, Mr., his improvements in the preparation of flax, 272
Schneider, M., designs by, of the great iron steamer for the navigation of the Rhone, 570
School of Mines, 71
Schools in India;—School of arts in Madras, 531; school for elementary and mechanical science at Roorkee, ib.; college at Poonah, ib.
Science, agriculture, manufactures, and commerce, dependent upon, 327; how it repays the culture bestowed upon it, 328
Scientific and practical men, necessity for effecting a more intimate union between, 296, 297; the Great Exhibition greatly instrumental in doing so, 331
Scientific men, how treated in this country, 394, 395
Screw-cutting lathe, 306
Screw-propellers, engines for driving, 409; advantages over direct-acting paddle-wheel engines, 409, 562, 563; early application of, 561; trial between the *Rattler*, screw-propeller, and the *Alecto*, paddle-wheel, 562; points to be decided respecting, ib.
Sculpture in India, 520
Sea-coroner, suggestion for the appointment of a, 619, 620
Sea Island cotton, its excellence to be ascribed to the care taken in its cultivation and collection, 267
Sealing-wax, mode of manufacture of, in India, 486
Seppings, Sir Robert, his system of diagonal trussing in ship-building, 552; other improvements by him, 553
Sheathing the bottoms of ships, experiments in, in various ages, 552, 553
Shafts, new method of sinking, 47
Shaping-machine, 315
Shawls, Indian, unequalled in colour, 160; manufacture of, in India, 498
Sheep, wild and domesticated, 82–84 early breeding of, 87; crossing the breed at Mauchamp, 93
Shellac, deteriorated state in which it is sent to this country, 254
Shell bracelets, manufacture of, in India, 513
Shepherd, Mr., electro-magnetic clock by, 353
Shields, life-boats from, 581
Ship-building, variety of woods employed in, 276; in France conducted on scientific principles, 548

Ships-of-war, in early times, accompanied by "victuallers" for the carriage of provisions, 546; improvements in the construction of, taken from captured vessels, 546, 547
Shipwrecks, average annual number of, 575, 576, 620
Silk manufacture in India, 495, 497
Silk, raw, antiquity of its use, 103–105; French, 109; Italian, 111; Turkish, ib.; Indian, ib.; Chinese, 112; English, ib.
Silk-worm, 105; introduction into England, 106; varieties, 109; Count Bronski's treatment of, 110
Silver, specimens of, 62
Simms, Mr., excellence of the astronomical instruments exhibited by him, 339; equatoreals, 340; conversion of the axis of a transit instrument into a telescope, 340; method of illuminating the divisions on the micrometer head, 340–343; diagonal transit instrument, 346, 347; self-acting dividing machine, 348; thermometer, 362; standard bars and scales, 389
Slate, 68
Slide-rest, 303, 307, 308
Sleepers, railway, by Mr. Greaves, 420
Slotting and paring-machine, 315
Snow Harris, Sir William, lightning-conductor by, 570
Soap, 179; how manufactured in India, 484
Society of Arts, exertions made by it to develope the resources of our colonies, 284; facilities possessed by it for the establishment of a Museum of Industry, 288, 289; rewards given by it for improvements in life-boats, 578, 601; in rockets and mortars, 616
Soda, stannate of, its preparation, 174
Soda-water apparatus, 434
Solly, Professor E., Lecture on the vegetable substances used in the arts and manufactures, 245
Solomon, his commercial intercourse with India, 451
Sounding-machine, by Erricssen, 570
Spectacles, large number of, exhibited, 360; adaptation of, to peculiarity of vision, ib.
Staffel, calculating-machine by, 387
Standard measures of length, 387
Starch, improvements in the manufacture of, 255
Steam-engine, improvements in, effect an improvement in the application of machinery to manufactures, 309
Steam-pump, by Mr. Garrett, 411
Steam-vessels, rise and progress of, 559, 560; competition in, between Kingston and Holyhead; their defects as war-vessels, 561; comparative cost of, and screw-propellers, 563
Steel, specimens of, 65; manufacture of, in India, 466, 467
Stocking-stones, 41
Stones for building, 67
Stone and quartz-crushing mills, 432
Stone, working in, extent to which it is employed in India, 513–517
St. John, of Buffalo, description of compass by, 354, 570
Sugar-cane, 229
Sugar-crushing mills, 433
Sumatra, its contributions, 16
Suspension and draw-bridges, 435
Swash-lathe, 305
Switch, Mr. Wild's, railway, 421
Symonds, Sir William, improvements in ship-building, 554

Talbot, Mr., injurious effects of his patent in connexion with photography, 379
Tallow, Russian, largely superseded by vegetable oils, 180
Tanning, simplification of, 176
Tea, Chinese, finer qualities of, 231; spurious or "lie tea," 234; Assam, 231; Himalayan, 233
Textile arts, as practised in India, 487–503

Textile fabrics, chemistry of, 169
Thames Yacht Club, 558
Thermometer, by Rev. R. Sheepshanks, considered the most accurate in this country, 362; maximum and minimum, 363
Tide-guages, self-registering, 389, 390
Timber, amount of, imported annually into Great Britain, 276; specimens of, at the Great Exhibition, 277; methods of seasoning and preserving, 279
"The Times," on the value of Indian products, 533
Tin ore, 61; invention for separating wolfram from, 61
Tobacco, Havannah, 235; Trinidad, 236, 242; Russian, 237
Tobes, African mode of glazing, 159
Tonnage Commission of Revision, 557
Tonnage laws, injurious effects of, 555, 556
Tools. See Machines.
Topographical models, 435
Tortoise-shell, 123
Travelling crane, by Messrs. M'Nicol and Vernón, of Liverpool, 414
Traversing table, by Mr. Dunn, 421
Trengrouse, Mr. Henry, the first to suggest the use of the rocket and line in shipwrecks, 616
Tubular bridges, models of, 435
Tubular crane, by Mr. Fairbairn, 413
Tunis, pottery of, its elegance, 160
Turner, Mr., model of a Coast-guard safety-galley, 584
Turning, a favourite amusement with amateurs in France, 306
Turning-lathe, 305; uses to which it is put in India, 517
Typha bread, 219

Ultramarine, 142; artificial, 173
United States, establishment by the government of life-boats on the coast of New Jersey, 584

Van Houten, Mr. Willem, model of life-boat in use in Holland, 583
Vegetables, dried, 221; Masson's process, 222
Vegetable fibres, varieties of, 274
Vegetable tallow from China, 258
Vegetable wax, high duty till lately imposed upon, 258
Ventilators, by Mr. Hurwood, 436
Vieille Montagne Zinc Company, 61
Vienna, Imperial Polytechnic Institution of, exhibitors of surveying instruments, 355
Volta, discovery of voltaic electricity, 349
Von Kees, S. E., establishment of a Museum of Industry by, in Austria, 287

Washington, Captain, Lecture on the progress of naval architecture, and on life-boats, 541
Water-engines, 412
Water, hard, its disadvantages, 171
Weight-table for railway engines, by Mr. Pooley, 421
Whalebone, or baleen, 98–103
Wheat, S. Australian, 212, 241; its excellence the effect of climate, 214; experiments, 214; Castilian, 213; Revitt, 215
Whewell, Rev. Dr., Lecture on the general bearing of the Great Exhibition, 3
White, Mr., his models of vessels, 555
Whitworth, Mr., his proposal to classify screws, 27
Willis, Rev. Robert, Lecture on machines and tools for working in metal, wood, and other materials, 293
Wilson, Professor, his translation of the Rig-Veda, 456
Wool, its quality, 81; German, 83; American, 90; Russian, ib.; Spanish, ib.; French, 91; English, 94, 95; Australian, 95; Indian, 96; Cashmere, produced by Prince Albert, ib.
Wool-combing machine, by Mr. Donisthorpe, 425; by Mr. Calvert, 426

Woollen manufactures in India, 497
Working classes, advantages accruing to, from the Great Exhibition, 330
Worsted machine, by Mr. Berry, 425
Wreck Chart of the United Kingdom, 575, 619

Xanthorrhœa, red resin of, its increased demand in this country, 253

Yeates, Mr. Andrew, prismatic compass by, 355

Zinc, specimens of, 61

London :—Printed by G Barclay, Castle St. Leicester Square

00080328

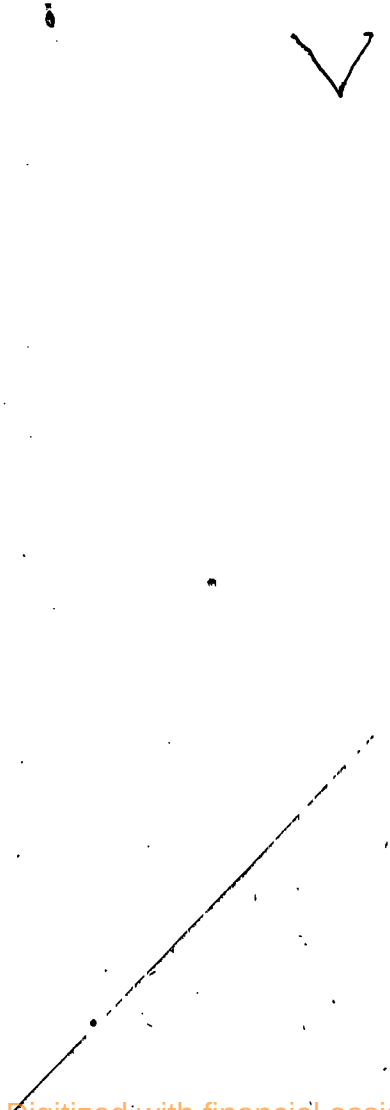

Digitized with financial assistance from the
Government of Maharashtra
on 16 March, 2016